www.freeservicemanuals.info 11/15/15

Digitized by WWW.FREESERVICEMANUALS.INFO

SLV-125/225/225CP/225VP

RMT-V126/V126A/V126D/V262G

SERVICE MANUAL

AEP Model
SLV-125/225/225VP

Australian Model
SLV-225VP

Spanish Model
SLV-225CP

Remote commander RMT-V262G (SLV-125), RMT-V126 (SLV-225), RMT-V126D (SLV-225CP) and RMT-V126A (SLV-225VP) is avaliable as a unit, but as individual parts the battery case lid of commander is only available.

Photo: SLV-125

Free service manuals
Gratis schema's
Digitized by
www.freeservicemanuals.info

SPECIFICATIONS

Technische Daten (SLV-225AE/225VP)

System

Kanalbereich	SLV-225AE/225VP VHF-Kanäle E2 - E12 CATV-Kanäle S01-S03, S1-S20 HYPER-Kanäle S21-S41 UHF-Kanäle E21-E69

Eingänge und Ausgänge

Videoeingang	EURO-AV: 21pol (Stift 20)
Videoausgang	EURO-AV: 21pol (Stift 19)
Audioeingänge	EURO-AV: 21pol (Stift 2 und 6)
Audioausgänge	EURO-AV: 21pol (Stift 1 und 3)

Allgemeine Daten

Stromversorgung	220/230 V Wechselspannung, 50 Hz
Leistungsaufnahme	30 W
Betriebstemperatur	5 °C bis 40 °C
Lagertemperatur	–20 °C bis +60 °C
Abmessungen	430 × 95 × 362 mm (B/H/T) (einschl. vorspringender Teile und Bedienungselemente)
Gewicht	6,0 kg

Mitgeliefertes Zubehör

Infrarot-Fernbedienung RMT-V126 (bei SLV-225AE) oder RMT-V126A (bei SLV-225VP) mit zwei R6-Mignonzellen (1)
75-Ohm-Koaxialkabel (1)
Werkzeug zum Einstellen des HF-Kanals (1)
Netzkabel (1)

Änderungen, die dem technischen Fortschritt dienen, bleiben vorbehalten.

Hinweis

Das Gerät erfüllt bezüglich Störstrahlungsunterdrückung die EG-Richtlinie 87/308/EG.

SAFETY-RELATED COMPONENT WARNING!!

COMPONENTS IDENTIFIED BY MARK ⚠ OR DOTTED LINE WITH MARK ⚠ ON THE SCHEMATIC DIAGRAMS AND IN THE PARTS LIST ARE CRITICAL TO SAFE OPERATION. REPLACE THESE COMPONENTS WITH SONY PARTS WHOSE PART NUMBERS APPEAR AS SHOWN IN THIS MANUAL OR IN SUPPLEMENTS PUBLISHED BY SONY.

VHS PAL VHS VIDEO CASSETTE RECORDER

SONY®

MICROFILM

Published in Heiloo, Holland.

www.freeservicemanuals.info 11/15/15

Digitized by WWW.FREESERVICEMANUALS.INFO

Caratteristiche tecniche (SLV-125)

Sistema

Gamma di canali	Canali VHF E2-E12 (da A a H solo per l'Italia) Canali CATV S01-S03 Canali CATV S1-S20 HYPER S21-S41 Canali UHF E21-E69

Ingressi e uscite

Ingressi video	EURO-AV: 21 terminali (terminale 20)
Uscite video	EURO-AV: 21 terminali (terminale 19)
Ingressi audio	EURO-AV: 21 terminali (terminali 2 e 6)
Uscite audio	EURO-AV: 21 terminali (terminali 1 e 3)

Generali

Alimentazione	220/230 V CA, 50 Hz
Consumo	30 W
Temperatura di impiego	Da 5°C a 40°C
Temperatura di deposito	Da –20°C a 60°C
Dimensioni	430 x 95 x 352 mm (l/a/p) (inclusi comandi e parti sporgenti)
Peso	6,0 kg

Accessori in dotazione

Telecomando senza fili RMT-V262G con due pile R6 (1)
Cavo coassiale da 75 ohm (1)
Regolatore di canale RF (1)
Cavo di alimentazione CA (1)

Disegno e caratteristiche tecniche soggetti a modifiche senza preavviso.

Nota

Conforme al D.M. 13 aprile 1989 direttiva CEE/87/308.

Especificaciones (SLV-225CP)

Sistema

Cobertura de canales	Canales de VHF: E2 a E12 Canales de cablevisión: S01 a S03 Canales de cablevisión: S1 a S20 Canales de HYPER: S21 a S41 Canales de UHF: E21 a E69

Entradas y salidas

Entrada de vídeo	EURO-AV, CANAL PLUS: 21 terminales (terminal 20)
Salida de vídeo	EURO-AV, CANAL PLUS: 21 terminales (terminal 19)
Entrada de audio	EURO-AV, CANAL PLUS: 21 terminales (terminales 2 y 6)
Salida de audio	EURO-AV, CANAL PLUS: 21 terminales (terminales 1 y 3)

Generales

Alimentación	220/230 V CA, 50 Hz
Consumo	30 W
Temperatura de funcionamiento	5°C a 40°C
Temperatura de almacenamiento	– 20°C a +60°C
Dimensiones	430 x 95 x 362 mm (an/al/prf) (incluyendo las partes y controles salientes)
Peso	6,0 kg

Accesorios suministrados

Telemando inalámbrico RMT-V126D con dos pilas R6 (1)
Cable coaxial de 75 ohmios (1)
Ajustador de los canales de RF (1)
Cable de alimentación de CA (1)

Diseño y especificaciones sujetos a cambios sin previo aviso.

Nota

Este aparato cumple las normas de la directiva de CEE 87/308/EEC relativas a la supresión de interferencias.

SAFETY CHECK-OUT

After correcting the original service problem, perform the following safety checks before releasing the set to the customer:

1. Check the area of your repair for unsoldered or poorly-soldered connections. Check the entire board surface for solder splashes and bridges.
2. Check the interboard wiring to ensure that no wires are "pinched" or contact high-wattage resistors.
3. Look for unauthorized replacement parts, particularly transistors, that were installed during a previous repair. Point them out to the customer and recommend their replacement.
4. Look for parts which, though functioning, show obvious signs of deterioration. Point them out to the customer and recommend their replacement.
5. Check the B+ voltage to see it is at the values specified.

Published in Heiloo, Holland.

www.freeservicemanuals.info 11/15/15

Digitized by WWW.FREESERVICEMANUALS.INFO

TABLE OF CONTENTS

Section	Title	Page
1. GENERAL		
	Zusatzinformationen (SLV-225AE/225VP)	5
	Vorbereitungen (SLV-225AE/225VP)	6
	Grundlegender Betrieb (SLV-225AE/225VP)	12
	Fortgeschrittener Betrieb (SLV-225AE/225VP)	16
2. DISASSEMBLY		
	2-1. Removal of Upper Case	20
	2-2. Removal of Bottom Plate	20
	2-3. Removal of Front Cabinet	20
	2-4. Removal of CP-1 Board Assy	21
3. DIAGRAMS		
	Circuit Board Locations	22
	Overall Wiring Diagram	23
	Mechanism Connection Circuit Diagram	25
	Video Circuit Basic Block Diagram	26
	System Control & Servo Circuit Basic Block Diagram	29
	Audio Circuit Basic Block Diagram	32
	Input/Output Selector Circuit Basic Block Diagram (SLV-225CP Only)	32
4. PRINTED WIRING BOARDS AND SCHEMATIC DIAGRAMS		33
	CP-1 Board (PW-A) Power Supply Circuit Diagram	35
	PW-1, 2, 3 Board Power Supply Circuit Diagram	36
	CP-1 Board (VD-A) Video Circuit Diagram	38
	Waveform of Video	40
	VP-1 Board Video PRE-AMP Circuit Diagram	41
	CP-1 Board (CV-A) RF Converter Connection Circuit Diagram	41
	CP-1 Board (TN-A) Tuner IF Connection Circuit Diagram	42
	TB-1 Board Circuit Diagram (SLV-225, 125, 225VP)	44
	CP-1 Board (AD-A) Audio Circuit Diagram	46
	CP-2 Board (VD-B, SV-B) PAL/MESECAM Discrimination & NAP Process Circuit Diagram	47
	Waveform of PAL/MESECAM Discrimination & NAP Circuit	49
	CP-1 Board (SY-A) System Control Circuit Diagram	50
	Waveform of Servo	52
	CP-1 Board (SV-A) Servo Circuit Diagram	53
	TM-1, 2 Board Operation Key & Display (FLD) Circuit Diagram	56
	A7101 Display (FLD) GRID/ANODE Assignment Drawing & Table	58
	IF Circuit Diagram	59
	RF Converter Circuit Diagram	61
	RF Converter Circuit Diagram	61
	TB-1, 2 Board Terminal & Input/Output Selection Circuit Diagram (SLV-225CP)	62
	TB-8 Board VPS Circuit Diagram (SLV-225VP Only)	65
	Semiconductor Lead Layouts	66
	IC301 System Control/Timer/Tuning Control MPU Pin functions Table	67
5. MECHANISM SERVICE TECHNICAL INFORMATIONS		
	1. Outline of P92 Mechanism	69
	2. Description of Mechanism Operation	71
	2-1. Basic Operation Mode of Mechanism	71
	2-2. Description of Mechanism Drive	72
	2-2-1. Tape Loading Mechanism	76
	2-2-2. Pinch Roller Pressing Mechanism	77
	2-2-3. Operation of Brake Control Plate	78
	2-2-4. Brake Control Mechanism	79
	2-2-5. Brake Lock Release Mechanism	80
	2-3. Reel Table Drive	82
	2-3-1. Reel Table Drive Mechanism	82
	2-3-2. Reel Table Drive Clutch Lock and Release Mechanism	84
	2-4. Front Loading Drive Selection Mechanism	86
	2-5. Cassette Holder Mechanism	90
	2-5-1. Components	90
	2-5-2. Description of Cassette Holder	91
	3. Mechanism Control	92
	3-1. Mode Arrangement	92
	3-2. Mode Detection Switch	92
	3-3. Consideration to Full Loading	93
	4. Mechanism Maintenance and Checking	94
	4-1. Periodic Checking and Maintenance Items and Service Jigs	94
	4-1-1. Periodic Check Items	94
	4-1-2. Cleaning	95
	4-1-3. Service Jigs	96
	4-2. Mode Selector (VHJ-0050) Handling Instructions	97
	4-2-1. Part Names	97
	4-2-2. Connection Method 1	98
	4-2-3. Connection Method 2	99

Free service manuals Gratis schema's Digitized by www.freeservicemanuals.info

Published in Heiloo, Holland.

www.freeservicemanuals.info 11/15/15

Digitized by WWW.FREESERVICEMANUALS.INFO

Section	Title	Page
4-2-4.	Handling Method	100
5.	Mechanism Dismantling and Reassembling	101
5-1.	Mechanism Main Unit	101
5-2.	Cassette Holder Mechanism	102
5-2-1.	COMPL Cassette Mechanism	102
5-2-2.	Gear Bracket Ass'y	103
5-2-3.	Cassette Drive Gear (Right)	104
5-2-4.	Cassette Drive Gear (Left)	105
5-2-5.	FL Start Switch	106
5-2-6.	T-Top Sensor, T-End Sensor	107
5-3.	COMPL Holder Motor (Loading Motor Block)	108
5-3-1.	COMPL Motor Bracket	108
5-3-2.	Loading Motor	109
5-4.	Tape Loading Mechanism	111
5-4-1.	Main Parts of the Tape Loading Mechanism	111
5-4-2.	Mode Cam	113
5-5.	COMPL Head Bracket (ACE Head)	114
5-6.	Pinch Roller Pressure Mechanism	115
5-7.	Brake Mechanism	117
5-7-1.	Sub Take-up Brake Ass'y	117
5-7-2.	Supply Brake Ass'y and Take-up Brake Ass'y	118
5-7-3.	Tension Lever Ass'y and Band Holder Ass'y	119
5-7-4.	Capstan Brake Ass'y	120
5-8.	Reel Table Drive Mechanism	121
5-8-1.	Supply Reel Ass'y and Supply Reel Gear	121
5-8-2.	Take-up Reel Ass'y	122
5-8-3.	Take-up Reel Gear	123
5-8-4.	Reel Pulley and Friction Gear Ass'y	124
5-8-5.	COMPL Clutch	125
5-8-6.	Clutch Change Lever and Clutch Lever Ass'y	126
5-9.	Capstan Motor	127
5-10.	Fixed Guide, FE Head Lever Ass'y	128
5-10-1.	S-Side Fixed Guide and FE Lever Ass'y	128
5-10-2.	Impedance Roller, FTE Head	129
5-10-3.	Exit Side Fixed Guide	130
5-11.	Drum Section	131
5-11-1.	Drum Motor (rotor, stator)	131
5-11-2.	Drum Unit	132
5-11-3.	Upper Drum (Upper Cylinder)	133
5-12.	How to Proceed when the Cassette Cannot be Removed	136
5-13.	Auto Head Cleaner Mechanism	137

Section	Title	Page
6. MECHANISM ADJUSTMENTS		
6-1.	Operating the Mechanism with no Cassette Inserted	138
6-2.	Reel Table Height Adjustment and Torque Check	139
6-2-1.	Reel Table Height	139
6-2-2.	Torque Check	140
6-3.	Tension Pole (Back Tension Guide) Position Adjustment and Back Tension Torque Check	141
6-3-1.	Tension Pole (Back Tension Guide) Position Adjustment	141
6-3-2.	Back Tension Torque Check	141
6-4.	Tape Path Adjustment	142
6-4-1.	Preparations for Adjustment	142
6-4-2.	Adjustment by Visual Observation after Guide Roller, COMPL Head Bracket Replacement	143
6-4-3.	Guide Roller Adjustment	145
6-4-4.	COMPL Head Bracket (ACE Head) Adjustment	146
6-4-5.	Checking after Adjustment	148
7. ELECTRICAL ADJUSTMENTS		
1.	Circuit Board Locations	150
1-1.	Main Boards	150
1-2.	Location for Tape Path Adjustment	150
2.	Electrical Adjustment	151
2-1.	Preparation	151
2-1-1.	Equipment	151
2-1-2.	Set-Up	151
2-2.	Servo Circuit Adjustment	152
2-3.	Video Circuit Adjustment	153
2-4.	Audio Circuit Adjustment	155
2-5.	Tuner IF Circuit Adjustment	155
8. EXPLODED VIEWS		
8-1.	Cabinet & Chassis Parts	156
8-2.	Mechanism Parts 1	158
8-3.	Mechanism Parts 2	160
8-4.	Mechanism Parts 3	162
9. ELECTRICAL PARTS LIST		163
Hardware List		171

Published in Heiloo, Holland.

Digitized by WWW.FREESERVICEMANUALS.INFO

Zusatzinformationen (SLV-225AE/225VP)

Bezeichnung der Bedienungselemente

Genaueres kann den in Kreisen angegebenen Seiten entnommen werden.

An der Vorderseite

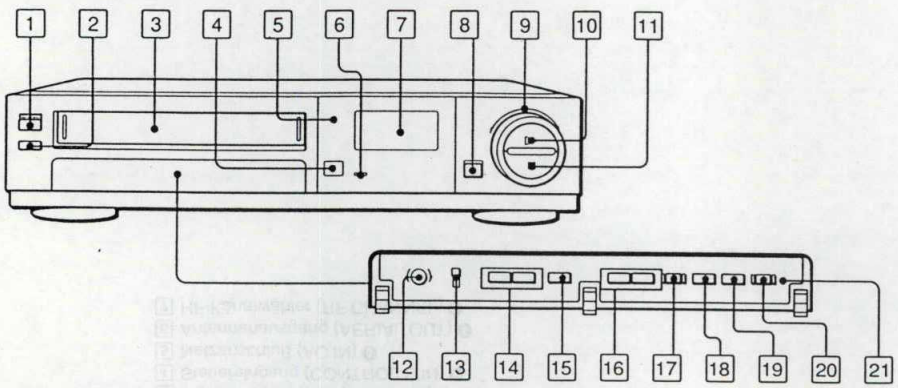

1 Ein/Bereitschafts-Schalter und Anzeige (ON/STANDBY) ❽, ⓴
2 Auswurftaste (▲ EJECT) ⓱
3 Cassettenfach
4 Fernbedienungssensor ❺
5 Spurlagenautomatik-Anzeige (AUTO TRACKING) ㉙
6 NTSC-Wiedergabe-Anzeige (NTSC PB ON PAL TV) ⓯
7 Display ㉘
8 Pausentaste (II PAUSE) ⓱, ㉔
9 Suchlaufknopf (DUAL MODE SHUTTLE) ㉔
10 Wiedergabetaste (► PLAY) ⓯, ㉔
11 Stopptaste (■ STOP) ⓱
12 Konturanhebungsregler (SHARPNESS) ⓱
13 Farbsystemwähler (COLOUR SYSTEM) ❼
14 Spurlagen/Feinabstimm/Standbildeinstell-Tasten (TRACKING/FINE TUNING/STILL ADJUST ▼/▲) ⓬, ㉔, ㉙
15 Spurlagenautomatiktaste (AUTO TRACKING) ㉙
16 Programmwahltasten (PROGRAM +/–) ⓳, ⓯, ⓴
17 Tunervorwahltaste (TUNER PRESET) ⓳
18 Weiterschalttaste (NEXT) ⓳
19 Video-Programm-System-Taste (VPS) (nur SLV-225VP) ㉑
20 Aufnahmetaste (● REC) ⓯, ㉒
21 Löschtaste (CL) ㉝, ㉟

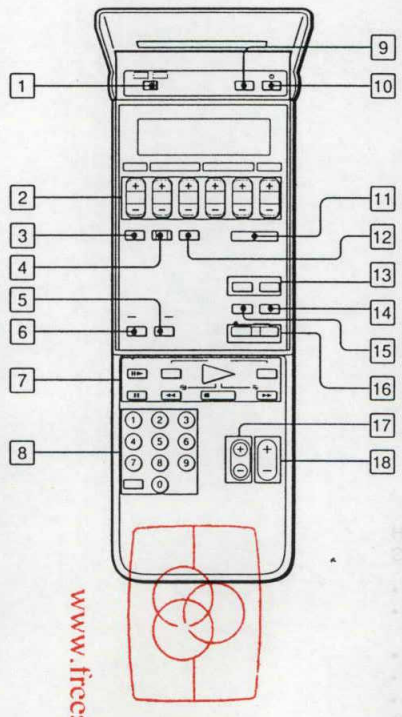

An der Fernbedienung

Tasten an der Fernbedienung mit der gleichen Bezeichnung wie am Gerät besitzen auch die gleiche Funktion. Tasten mit einem orangefarbenen Punkt können zur Steuerung eines Sony TV-Geräts verwendet werden, wenn der TV-VTR-Wähler auf TV steht. Die Zehnerstellentaste (-/--) kann bei bestimmten Sony TV-Geräten nicht verwendet werden.

1 TV/Videorecorder-Wähler (TV-VTR) ❺
2 Timer/Uhrzeit-Einstelltasten ⓮, ⓭
Datum (D)
Startzeit (START)
Endzeit (STOP)
Programmplatz (PROG +/–)
3 Timereinstelltaste (TIMER SET) ⓭
4 Uhrzeiteinstelltaste (CLOCK SET) ⓮
5 Zählerspeichertaste (COUNTER MEMORY) ㉗
6 Zählerrückstelltaste (COUNTER RESET) ㉗
7 Bandlauf-Funktionstasten ⓱, ㉔
Einzelbildweiterschaltung (II► FRAME)
Pause (II PAUSE)
Wiedergabe (► PLAY)
Stopp (■ STOP)
Vorwärts/Rückwärtssuchlauf (◄◄/►► SEARCH)
Rückspulen (◄◄ REW)
Vorspulen (►► FF)
8 Nummerntasten ⓲
9 TV/Video-Taste (TV/VIDEO)
10 Ein/Bereitschafts-Taste (⏻)
11 Übertragungstaste (TRANSMIT) ⓯
12 Video-Programm-System-Taste (VPS) (nur SLV-225VP) ㉑
13 Tasten für timergesteuerte Aufnahme (TIMER REC) ㉒
Löschen (CLEAR)
Überprüfen (CHECK)
14 Eingangswahltaste (INPUT SELECT) ⓱, ⓴
15 Indextaste (INDEX) ㉕
16 Aufnahmetasten (● REC) ⓯, ㉒
17 Programmwahltasten (PROG +/–) ⓳, ⓱, ⓴
18 Lautstärketasten (VOL +/–)

www.freeservicemanuals.info
Free service manuals
Gratis schema's
Digitized by

SECTION 1
GENERAL

This section is extracted from SLV-225AE/225VP instruction manual.

Published in Heiloo, Holland.
www.freeservicemanuals.info
11/15/15

Digitized by WWW.FREESERVICEMANUALS.INFO

www.freeservicemanuals.info

Published in Heiloo, Holland.

An der Rückseite

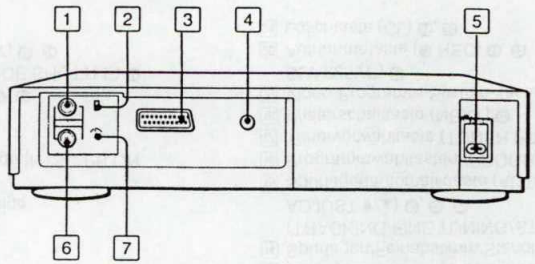

1 Antenneneingang (AERIAL IN) ❻
2 Testsignalschalter (TEST SIG.) ❽
3 21pol Euro-Buchse (EURO-AV) ❻
4 Steuereingang (CONTROL S IN) ⓫
5 Netzanschluß (AC IN) ❻
6 Antennenausgang (AERIAL OUT) ❻
7 HF-Kanalwähler (RF CHANNEL) ❾

Vorbereitungen (SLV-225AE/225VP)

Auspacken des Videorecorders

Nehmen Sie das Gerät aus dem Karton heraus und packen Sie die Zubehörteile aus. Überprüfen Sie, ob die folgenden Zubehörteile mitgeliefert sind:

- Netzkabel
- Koaxialkabel
- Fernbedienung RMT-V126 (bei SLV-225AE) bzw. RMT-V126A (bei SLV-225VP) und Batterien
- Werkzeug zum Einstellen des HF-Kanals
- Bedienungsanleitung

Sollte eines dieser Zubehörteile fehlen, wenden Sie sich bitte an Ihren Sony Händler.

Fernbedienung

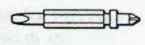
Werkzeug zum Einstellen des HF-Kanals

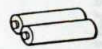
Batterien

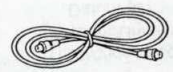
Koaxialkabel

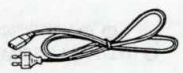
Netzkabel

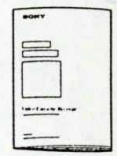
Bedienungsanleitung

11/15/15

Digitized by WWW.FREESERVICEMANUALS.INFO

Anschluß des Videorecorders

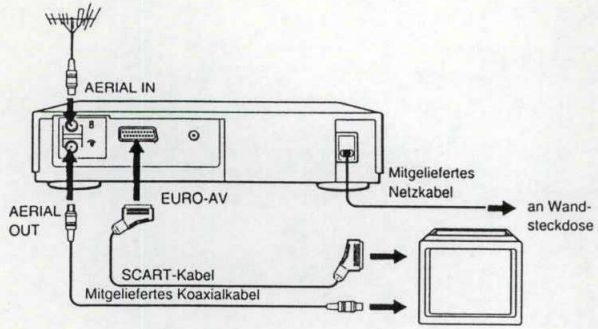

1 Drehen Sie den Videorecorder herum, damit Sie die Rückseite sehen können.

2 Trennen Sie das Antennenkabel vom TV-Gerät ab und schließen Sie es am AERIAL IN-Anschluß des Videorecorders an.

3 Verbinden Sie die AERIAL OUT-Buchse des Videorecorders über das beim Videorecorder mitgelieferte Koaxialkabel mit dem Antenneneingang am TV-Gerät.

4 Vergewissern Sie sich, daß alle Verbindungen richtig hergestellt sind.

5 Verbinden Sie die AC IN-Buchse des Videorecorders über das mitgelieferte Netzkabel mit einer Wandsteckdose.

Zusätzlicher Anschluß
Wenn Ihr Gerät eine EURO-AV-Buchse (SCART) besitzt, verbinden Sie diese über ein VMC-2121CE-Kabel (SCART-Kabel, nicht mitgeliefert) mit der EURO-AV-Buchse dieses Videorecorders. Sie erhalten dann eine bessere Bildqualität. Bei Unklarheiten schlagen Sie in der Anleitung des TV-Gerätes nach.

Einstellung des Farbsystems

Der Videorecorder ist für TV-Empfang und Bandaufnahme von PAL-Farbsignalen und für Bandwiedergabe von sowohl PAL- als auch NTSC-Farbsignalen ausgelegt.
Zur Wiedergabe von im NTSC-Farbsystem bespielten Bändern verwenden Sie ein TV-Gerät mit PAL-Farbsystem. Besitzt Ihr TV-Gerät einen COLOUR SYSTEM-Wahlschalter, stellen Sie ihn auf PAL.

Vor der Aufnahme

Der COLOUR SYSTEM-Wähler muß auf PAL gestellt werden.

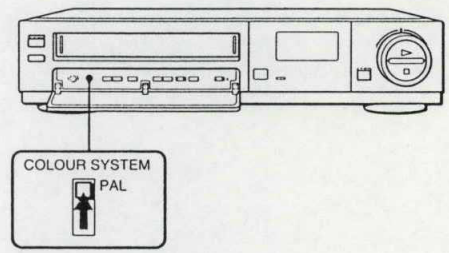

Vor der Wiedergabe

Der COLOUR SYSTEM-Wähler muß entsprechend dem Farbsystem der wiederzugebenden Cassette eingestellt werden.

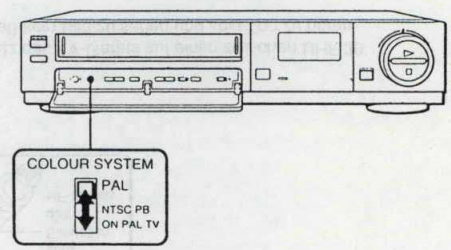

Bei Wiedergabe von Bändern, die im NTSC-Farbsystem bespielt wurden
Abhängig vom verwendeten TV-Gerät erscheinen am oberen und unteren Bildrand möglicherweise schwarze Balken, oder das Bild ist nicht zu sehen.

PAL (nur bei SLV-225AE):	Zur Wiedergabe von im PAL-Farbsystem bespielten Bändern.
PAL/MESECAM (nur bei SLV-225VP):	Zur Wiedergabe von im PAL- oder SECAM B/G-Farbsystem bespielten Bändern.
NTSC PB ON PAL TV:	Zur Wiedergabe von im NTSC-Farbsystem bespielten Bändern auf einem PAL-TV-Gerät.

Published in Heiloo, Holland.

www.freeservicemanuals.info

11/15/15

Digitized by WWW.FREESERVICEMANUALS.INFO

Abstimmen des TV-Geräts auf den Videorecorder

Sind Videorecorder und TV-Gerät nur über die Antennenanschlüsse miteinander verbunden, muß ein Programmplatz des TV-Geräts auf das Videorecorder-Ausgangssignal abgestimmt werden. Sind die Geräte dagegen über die EURO-AV-Buchse miteinander verbunden, so ist dies nicht erforderlich.

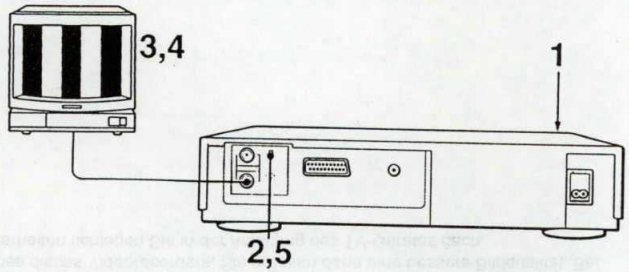

1 Drücken Sie ON/STANDBY, um den Videorecorder einzuschalten.

2 Stellen Sie TEST SIG. auf ON.
Der Videorecorder gibt dann ein Testsignal auf einem zwischen UHF 30 und 39 liegenden Kanal aus.

3 Schalten Sie das TV-Gerät ein und wählen Sie einen freien Programmplatz.

4 Stimmen Sie den Programmplatz am TV-Gerät so ab, daß das Testbild deutlich auf dem Bildschirm zu sehen ist.

5 Stellen Sie TEST SIG. auf OFF.

Der Programmplatz des TV-Geräts ist damit auf das Videorecorder-Ausgangssignal abgestimmt. Wenn ein Band mit dem Videorecorder wiedergegeben werden soll, wählen Sie stets wieder am TV-Gerät den Programmplatz von Schritt 3.

Wenn das Testbild gestört ist

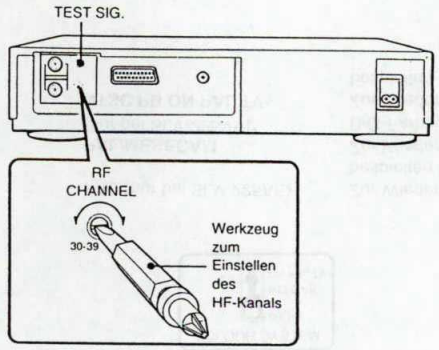

1 Stellen Sie TEST SIG. auf OFF.

2 Stimmen Sie einen Programmplatz des TV-Geräts auf einen zwischen UHF 30 und 39 liegenden Kanal so ab, daß kein Bild zu sehen und kein Ton zu hören ist.

3 Stellen Sie TEST SIG. auf ON.

4 Drehen Sie RF CHANNEL langsam mit dem mitgelieferten Einstellwerkzeug, bis das Testbild einwandfrei auf dem TV-Schirm angezeigt wird.

5 Stellen Sie TEST SIG. auf OFF.

Published in Heiloo, Holland.

www.freeservicemanuals.info

11/15/15

Digitized by WWW.FREESERVICEMANUALS.INFO

Vorwahl der TV-Sender am Videorecorder

Um TV-Programme mit dem Videorecorder empfangen oder aufnehmen zu können, müssen die Programmplätze mit TV-Sendern belegt werden. Bis zu 49 TV-Sender können vorgewählt werden.

Vorgehensweise

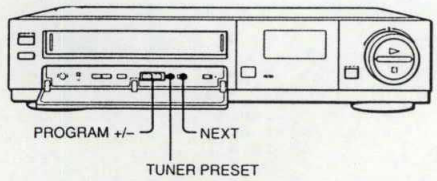

1 Schalten Sie den Videorecorder und das TV-Gerät ein.
Sind Videorecorder und TV-Gerät nur über die Antennenanschlüsse miteinander verbunden, wählen Sie den für Videobetrieb voreingestellten Programmplatz am TV-Gerät. Sind die Geräte dagegen über die EURO-AV-Buchse miteinander verbunden, wählen Sie am TV-Gerät den Videoeingang.

2 Drücken Sie TUNER PRESET.

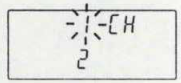

3 Drücken Sie PROGRAM + oder –, bis die Nummer des gewünschten Programmplatzes im Display des Videorecorders angezeigt wird.

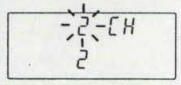

Drücken Sie dann NEXT.

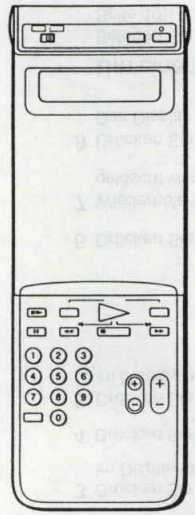

4 Drücken Sie PROGRAM + oder – zur Wahl zwischen normalem TV-Empfang und Empfang von Kabelprogrammen.
CH: Für normalen TV-Empfang über Antenne.
CC: Für Empfang von Kabelprogrammen.

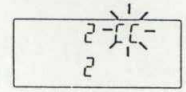

Drücken Sie dann NEXT.

5 Drücken Sie PROGRAM + oder –. PROGRAM + dient zur Wahl eines höheren, PROGRAM – zur Wahl eines niedrigeren Kanals.

Die Anzeigen im Display und die Kanäle können der folgenden Tabelle entnommen werden :

		Kanal	Kanalnummer
CH	VHF	2 – 12	2 – 12
	VHF Italien	A – H2	3 (A) 4 (B) 15 (C) 5 (D) 8 (E) 7 (F) 9 (G) 10 (H) 11 (H1) 12 (H2)
	UHF	21 – 69	21 – 69
CC	CATV	S01, S02, S03	75, 76, 77
		S1 – S41	1 – 41
S	Überspringen		

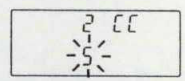

Wenn der Kanal richtig abgestimmt ist, blinkt die Kanalnummer.
Drücken Sie dann NEXT.

6 Wiederholen Sie die Schritte 3 bis 5, um noch weitere Programmplätze mit Kanälen zu belegen.

7 Drücken Sie TUNER PRESET.
Das Display schaltet auf normale Anzeige zurück.

Wahl des TV-Kanals

Zur Wahl des TV-Kanals im obigen Schritt 5 stehen zwei Möglichkeiten zur Verfügung:

- Drücken Sie PROGRAM + oder –, bis auf den gewünschten Kanal abgestimmt ist.
- Geben Sie die Nummer des Kanals mit den Nummerntasten an der Fernbedienung ein. Zur Eingabe einer einstelligen Nummer drücken Sie zuerst 0 und dann die betreffende Nummer.

Published in Heiloo, Holland.
www.freeservicemanuals.info
11/15/15

Digitized by WWW.FREESERVICEMANUALS.INFO

Feinabstimmung des Bildes

Ist das TV-Bild eines bestimmten Kanals nicht zufriedenstellend, verfahren Sie wie folgt:

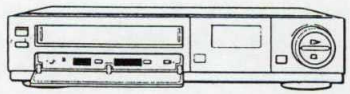

1 Drücken Sie PROGRAM + oder – zur Wahl des fein abzustimmenden Kanals.

2 Drücken Sie TUNER PRESET.

3 Drücken Sie TRACKING/FINE TUNING ▼ oder ▲, bis Bild und Ton optimal sind.

4 Drücken Sie TUNER PRESET.

Löschen von unerwünschten Programmplätzen

Unerwünschte Programmplätze können gelöscht werden, so daß sie bei Drücken von PROGRAM +/– übersprungen und nur die gewünschten Programmplätze gewählt werden.

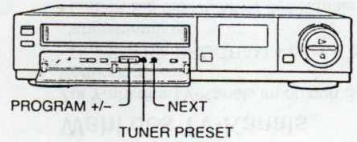

1 Schalten Sie den Videorecorder und das TV-Gerät ein.

2 Drücken Sie TUNER PRESET.

3 Drücken Sie PROGRAM + oder –, bis der zu überspringende Programmplatz im Display des Videorecorders angezeigt wird.

4 Drücken Sie NEXT.

5 Drücken Sie PROGRAM + oder –, bis ein S in der Tuner-Betriebsartenanzeige im Display blinkt.

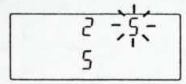

6 Drücken Sie NEXT.

7 Wiederholen Sie die Schritte 3 bis 6, wenn noch weitere Programmplätze gelöscht werden sollen.

8 Drücken Sie TUNER PRESET.
Das Display schaltet auf normale Anzeige zurück.

Um einen gelöschten Programmplatz wieder zu aktivieren

Belegen Sie den gelöschten Programmplatz erneut mit einem TV-Kanal (siehe Seite 10).

Published in Heiloo, Holland.
—10—
www.freeservicemanuals.info
11/15/15

Digitized by WWW.FREESERVICEMANUALS.INFO

Einstellung von Datum und Uhrzeit

1 Öffnen Sie den Deckel der Fernbedienung.

2 Drücken Sie die CLOCK SET-Taste, und vergewissern Sie sich, daß die CLOCK-Anzeige im Display der Fernbedienung erscheint.

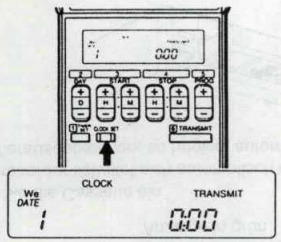

3 Drücken Sie die + oder – Seite der D-Taste bzw. halten Sie die Taste so lange gedrückt, bis das heutige Datum angezeigt wird.

Bei gedrückt gehaltener D-Taste ändern sich die Ziffern auf dem Display schneller.

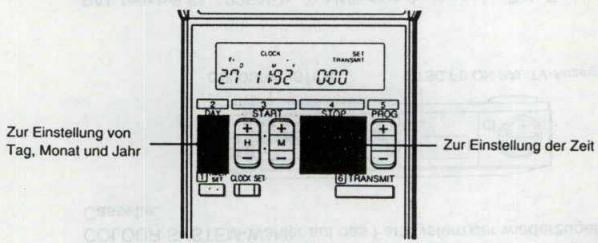

4 Zur Einstellung der Uhrzeit drücken Sie die STOP H- und M-Taste. Nach der Einstellung werden Datum und Uhrzeit weiterhin im Display gezeigt.

5 Sind Datum und Uhrzeit richtig eingestellt, richten Sie die Fernbedienung auf den Videorecorder und drücken Sie die TRANSMIT-Taste.

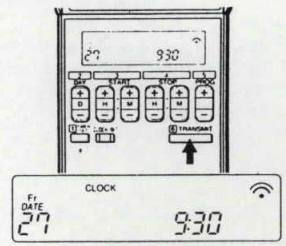

Das Display zeigt nun die Uhrzeit (auch wenn das Gerät ausgeschaltet ist).

Alle Einstellungen am Videorecorder sind nun beendet.

Published in Heiloo, Holland.
www.freeservicemanuals.info
11/15/15

Digitized by WWW.FREESERVICEMANUALS.INFO

Grundlegender Betrieb (SLV-225AE/225VP)

Wiedergabe einer Videocassette

Zur Widergabe einer Cassette schieben Sie diese in das Cassettenfach ein. Das Gerät wird dann automatisch eingeschaltet und zieht die Cassette vollständig ein.

1 Schalten Sie das TV-Gerät ein.
Sind Videorecorder und TV-Gerät nur über die Antennenanschlüsse miteinander verbunden, wählen Sie am TV-Gerät die Videorecorder-Programmposition.
Sind die Geräte dagegen über die EURO-AV-Buchse miteinander verbunden, wählen Sie am TV-Gerät den Videoeingang.

2 Öffnen Sie am Videorecorder das Bedienungselementefach und stellen Sie den COLOUR SYSTEM-Wähler auf das Farbsystem der wiederzugebenden Cassette.

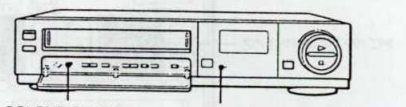

PAL (nur bei SLV-225AE): Zur Wiedergabe eines im PAL-Farbsystem bespielten Bandes.

PAL/MESECAM (nur bei SLV-225VP): Zur Wiedergabe von PAL- oder SECAM B/G-Aufzeichnungen.

NTSC PB ON PAL TV: Zur Wiedergabe eines im NTSC-Farbsystem bespielten Bandes auf einem PAL-TV-Gerät. Ist COLOUR SYSTEM auf NTSC PB ON PAL TV gestellt, so leuchtet die NTSC PB ON PAL TV-Anzeige in grün.

3 Schieben Sie die Cassette ein.
Der Videorecorder schaltet sich automatisch ein. Ist die Löschschutzlamelle der Cassette herausgebrochen, so beginnt automatisch die Wiedergabe.

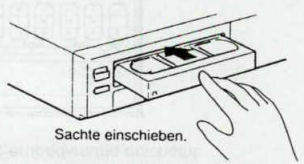

4 Drücken Sie ► PLAY.
Bei Erreichen des Bandendes wird das Band automatisch zum Bandanfang zurückgespult (Rückspulautomatik). Das Gerät bleibt allerdings weiterhin eingeschaltet.

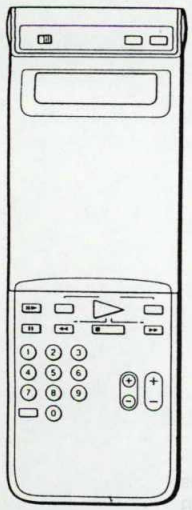

- Abhängig von Ihrem TV-Gerät erscheint bei der Wiedergabe eines im NTSC-Farbsystem bespielten Bandes das Bild möglicherweise in Schwarzweiß, zittert oder ist etwas kleiner.
- Enthält das Band Aufzeichnungen sowohl im PAL- als auch im NTSC-Farbsystem, so arbeitet der Bandzähler nicht exakt, da beide Farbsysteme verschiedene Zählimpulse verwenden.

- Bleibt der Videorecorder länger als fünf Minuten auf Pause geschaltet, so schaltet er automatisch auf normale Wiedergabe um.

Zum	Drücken Sie
Stoppen des Bandes	■ STOP
kurzzeitigen Anhalten der Wiedergabe	II PAUSE (Zum Fortsetzen der Wiedergabe II PAUSE erneut drücken.)
Auswerfen der Cassette	▲ EJECT am Videorecorder

Zum Einstellen der Bildschärfe

Für ausgeprägtere Bildkonturen drehen Sie den SHARPNESS-Regler nach SHARP und für weichere Bildkonturen nach SOFT.

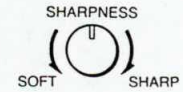

Published in Heiloo, Holland.
www.freeservicemanuals.info
11/15/15

Digitized by WWW.FREESERVICEMANUALS.INFO

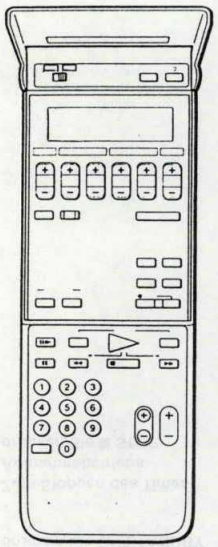

Aufnahme bei gleichzeitiger Betrachtung eines anderen TV-Programms
Wählen Sie mit der Fernbedienung den gewünschten TV-Programmplatz des TV-Geräts.

Zum Aufnehmen von TV-Programmen stehen drei verschiedene Möglichkeiten zur Verfügung:
- Aufnahme bei gleichzeitiger Betrachtung des TV-Programms
- Aufnahme bei gleichzeitiger Betrachtung eines anderen TV-Programms
- Timergesteuerte Aufnahme eines TV-Programms

Aufnahme bei gleichzeitiger Betrachtung des TV-Programms

Während Sie ein TV-Programm betrachten, können Sie dieses vollständig oder teilweise auf Band aufnehmen.

1 Schalten Sie den Videorecorder und das TV-Gerät ein.
Sind Videorecorder und TV-Gerät nur über die Antennenanschlüsse miteinander verbunden, wählen Sie am TV-Gerät die Videorecorder-Programmposition.
Sind die Geräte dagegen über die EURO-AV-Buchse miteinander verbunden, wählen Sie am TV-Gerät den Videoeingang.

2 Vergewissern Sie sich, daß die Löschschutzlamelle der zu bespielenden Cassette vorhanden ist, und schieben Sie die Cassette dann ein. Der Videorecorder schaltet sich automatisch ein, und die ⟳-Anzeige erscheint.

3 Wenn die AU-Anzeige im Display an der Vorderseite erscheint, drücken Sie INPUT SELECT.

4 Zur Wahl des aufzunehmenden TV-Programms drücken Sie PROG +/– oder geben Sie die Nummer des Programmplatzes mit den Nummerntasten ein.
Zur Wahl eines über 9 liegenden Programmplatzes mit den Nummerntasten drücken Sie zunächst -/-- und dann die betreffenden Nummerntasten.

5 Drücken Sie ● REC zusammen mit der rechts daneben liegenden Taste.
Die Aufnahme beginnt dann. Wird das Bandende erreicht, so spult das Gerät das Band automatisch zum Bandanfang zurück.

Zum	Drücken Sie
Ausblenden einer unerwünschten Szene	II PAUSE am Anfang der auszublendenden Szene. Am Ende dieser Szene drücken Sie II PAUSE erneut, um die Aufnahme fortzusetzen.
Stoppen der Aufnahme	■ STOP
Programmieren der Aufnahmedauer	● REC während des Aufnahmebetriebs. Während OFF blinkt, drücken Sie die Taste wiederholt, bis die gewünschte Aufnahmedauer im Display angezeigt wird.

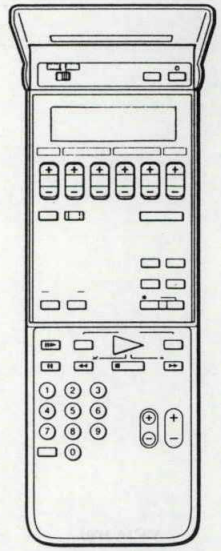

Wenn eine Cassette ohne Löschschutzlamelle eingelegt ist
Die ⏍-Anzeige blinkt, und die Cassette wird ausgeworfen.

Wenn bei der Einstellung des Tages die – Seite der D-Taste zweimal gedrückt wird
Der Tag des nächsten Monats erscheint. Durch Drücken der – Seite der D-Taste kann wieder zurückgeschaltet werden.

Wenn bei Drücken von TRANSMIT im Display des Videorecorders ER erscheint
Die Übertragung der Timer-Daten war nicht erfolgreich.

Timergesteuerte Aufnahme eines TV-Programms

Mit dem Timer können bis zu sechs TV-Sendungen innerhalb eines Monats automatisch während Ihrer Abwesenheit aufgezeichnet werden.

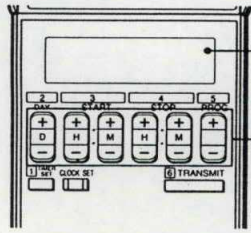
Display der Fernbedienung
Timer-Einstelltasten
Zur Programmierung des Timers verwenden Sie die Fernbedienung.
Nach der Programmierung der Ein- und Ausschaltzeiten richten Sie die Fernbedienung auf den Videorecorder und drücken Sie TRANSMIT, um die Timer-Daten zum Videorecorder zu übertragen.
TRANSMIT

1 Vergewissern Sie sich zunächst, daß das Display der Fernbedienung und das Display des Videorecorders jeweils die korrekte Uhrzeit anzeigt. Stellen Sie die Uhrzeit gegebenenfalls wie unter „Einstellung von Datum und Uhrzeit" auf Seite 14 ein.

2 Vergewissern Sie sich, daß die Löschschutzlamelle der zu bespielenden Cassette vorhanden ist, und schieben Sie dann die Cassette ein.

3 Drücken Sie TIMER SET.
Oben im Display der Fernbedienung erscheint TIMER SET.

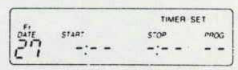

4 Programmieren Sie den Timer je nach gewünschtem Betrieb wie folgt:

Zum Aufnehmen an einem einzigen Tag

1 Drücken Sie D (Datum), bis der Tag, an dem die Aufnahme beginnen soll, im Display angezeigt wird.

2 Fahren Sie mit Schritt 5 unten fort.

Zum Aufnehmen von Sonntag bis Samstag

1 Drücken Sie D (Datum), bis der heutige Tag im Display angezeigt wird.

2 Drücken Sie die – Seite von D zur Wahl von „EVERY Su Mo Tu We Th Fr Sa".

3 Fahren Sie mit Schritt 5 fort.

Published in Heiloo, Holland.
www.freeservicemanuals.info
11/15/15

Digitized by WWW.FREESERVICEMANUALS.INFO

Wenn die Endzeit nicht eingestellt wird
Der Videorecorder nimmt bis zum Bandende auf.

Wenn bei Drücken von TRANSMIT im Display FULL erscheint
Es sind bereits 6 Programme gespeichert.

Wenn keine Cassette eingelegt ist
Nach der Programmierung des Timers blinkt die Timer-Bereitschaftsanzeige (⏲).

Wenn das Bandende erreicht wird
Die Aufnahme stoppt, das Band wird aber nicht zum Bandanfang zurückgespult.

Zum Abschalten der Timer-Betriebsbereitschaft drücken Sie ON/STANDBY

Zum Stoppen des Timer-Aufnahmebetriebs drücken Sie ■ STOP.

5 Drücken Sie H (Stunden) und M (Minuten) im START-Feld zur Einstellung der Aufnahme-Startzeit und H sowie M im STOP-Feld zur Einstellung der Aufnahme-Endzeit.
Für Aufnahme mit dem Video-Programm-System siehe Seite 21.

6 Drücken Sie PROG + oder – zur Wahl des aufzunehmenden TV-Programms. TRANSMIT blinkt im Display.

7 Richten Sie die Fernbedienung auf den Fernbedienungssensor am Videorecorder und drücken Sie TRANSMIT.
Die programmierten Ein- und Ausschaltzeiten werden einige Sekunden lang im Display des Videorecorders gezeigt, und der Videorecorder aktiviert den Aufnahme-Bereitschaftsbetrieb (die ⟳-Anzeige leuchtet).

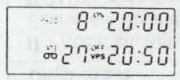

Display des Videorecorders

8 Drücken Sie TIMER SET.
Die momentane Uhrzeit erscheint im Display des Videorecorders, und der Videorecorder befindet sich nun im Aufnahme-Bereitschaftsbetrieb.

Wenn sich zwei Aufnahmevorgänge überlappen

Aufnahmevorgang 2 beginnt erst, wenn Aufnahmevorgang 1 abgeschlossen ist.

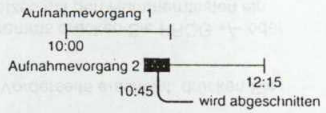

Wenn die Startzeit von zwei Aufnahmevorgängen zusammenfällt

Der zuerst programmierte Aufnahmevorgang beginnt erst, wenn der zweite Aufnahmevorgang beendet ist.

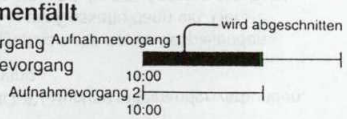

Zum Programmieren weiterer TV-Sendungen

Schalten Sie den Videorecorder ein und wiederholen Sie die Schritte 3 bis 8. Bis zu sechs TV-Sendungen können programmiert werden.

Zum Aufnehmen der an der EURO-AV-Buchse angeschlossenen Videosignalquelle

Drücken Sie im Schritt 6 INPUT SELECT, so daß im Display AU angezeigt wird.

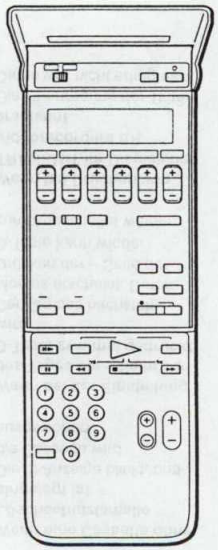

RMT-V126A

Aufnehmen mit dem Video-Programm-System (nur bei SLV-225VP)

Die Sendeanstalten der Bundesrepublik Deutschland strahlen zusammen mit den TV-Programmen VPS-Codes (VPS = Video-Programm-System) aus, die den Timer über Sendezeitänderungen und Programmunterbrechungen informieren, so daß die programmierte Sendung nicht abgeschnitten oder verpaßt wird. Wenn beispielsweise das reguläre Programm für eine wichtige Meldung unterbrochen wird, stoppt die Aufnahme automatisch. Sobald das reguläre Programm fortgesetzt wird, beginnt auch die Aufnahme wieder.

Wird im Schritt 5 des Abschnittes „Timergesteuerte Aufnahme eines TV-Programms" H (Stunden) oder M (Minuten) im START-Feld gedrückt, so wird die VPS-Funktion automatisch eingeschaltet. Zum Abschalten der VPS-Funktion drücken Sie VPS, so daß die VPS-Anzeige verschwindet.

Hinweise zur Aufnahme mit Video-Programm-System

- Wenn sich bei VPS-Timer-Aufnahmebetrieb aufgrund von Sendezeitänderungen Aufnahmevorgänge überlappen, besitzt der erste Aufnahmevorgang Priorität: Der zweite Aufnahmevorgang beginnt erst, wenn der erste Aufnahmevorgang abgeschlossen ist.
- Hat der Videorecorder kein VPS-Signal empfangen, weil das Empfangssignal zu schwach war oder die Sendeanstalt versehentlich kein VPS-Signal ausgesendet hat, so startet der Timer die Aufnahme zur programmierten Einschaltzeit (auch wenn die VPS-Anzeige im Display des Videorecorders zu sehen ist).

Published in Heiloo, Holland.

www.freeservicemanuals.info

11/15/15

Digitized by WWW.FREESERVICEMANUALS.INFO

www.freeservicemanuals.info

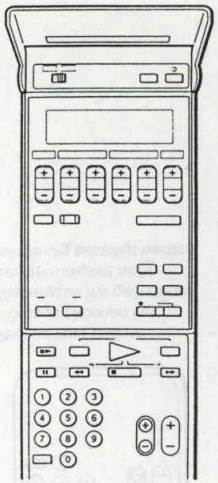

Wenn während des Blinkens der OFF-Anzeige ● REC nicht gedrückt wird
Die OFF-Anzeige erlischt, und die Aufnahme wird bis zum Bandende fortgesetzt, sofern sie nicht gestoppt wird.

Wenn das Bandende erreicht wird
Die Aufnahme stoppt, das Band wird aber nicht zum Anfang zurückgespult.

Zum Stoppen der Aufnahme
Drücken Sie ■ STOP.

Überprüfen/Ändern
Werden ● REC und die rechts daneben liegende Taste während Schnelltimerbetriebs gedrückt, so blinkt die Aufnahme-Endzeit zehn Sekunden lang. Während *dieser zehnsekündigen* Periode kann die Aufnahme-Endzeit durch Drücken von ● REC geändert werden.

Aufnehmen mit dem Schnelltimer

Das Programmieren des Schnelltimers gestaltet sich wesentlich schneller, da lediglich die Aufnahmedauer in 30-Minuten-Schritten programmiert werden muß. Im Gegensatz zur normalen timergesteuerten Aufnahme muß bei Schnelltimerbetrieb die Aufnahme manuell am Videorecorder gestartet werden. Der Schnelltimer beendet lediglich automatisch den Aufnahmebetrieb entsprechend der programmierten Dauer.

1 Vergewissern Sie sich, daß die Löschschutzlamelle der zu bespielenden Videocassette vorhanden ist, und schieben Sie dann die Cassette ein.

2 Wenn die AU-Anzeige im Display zu sehen ist, drücken Sie INPUT SELECT.

3 Drücken Sie PROG +/– zur Wahl des aufzunehmenden TV-Programms.

4 Drücken Sie ● REC zusammen mit der rechts daneben liegenden Taste.

5 Drücken Sie ● REC erneut.
Die OFF-Anzeige blinkt im Display des Videorecorders.

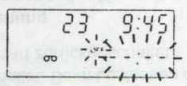

6 Drücken Sie ● REC, während die OFF-Anzeige blinkt (ca. 10 Sekunden lang).
Die QSR-Anzeige erscheint.

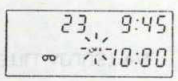

Bei jedem Drücken von ● REC erhöht sich die Aufnahmedauer um 30 Minuten.

Beispiel: Eine um 9:45 Uhr gestartete Aufnahme soll um 10:30 Uhr beendet werden.
Drücken Sie ● REC zweimal.

9:45
⬇
10:00 ➡ 10:30

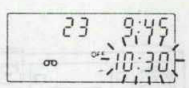

Wenn die Aufnahme zwischen 9:31 und 9:59 Uhr beginnt, so wird beim ersten Drücken der REC-Taste die Aufnahmezeit auf 10:00 eingestellt.

7 Die Aufnahme wird nun zur festgelegten Zeit beendet.

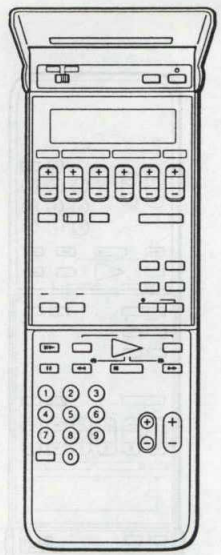

RMT-V126A

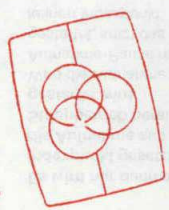

www.freeservicemanuals.info
Free service manuals
Gratis schema's
Digitized by

Überprüfen und Ändern der Timer-Programmierung

Die programmierten Aufnahmevorgänge können überprüft, gelöscht oder geändert werden.

Überprüfen der Timer-Programmierung

1 Schalten Sie den Videorecorder ein.

2 Drücken Sie TIMER REC CHECK.
Bei jedem Drücken von TIMER REC CHECK wird die jeweils nächste Timer-Einstellung gezeigt. Zur Überprüfung von Monat und Jahr drücken Sie PROG + zweimal. Wird TIMER REC CHECK während der Anzeige der letzten Timer-Daten gedrückt, so ist der Überprüfungsvorgang beendet und der Videorecorder schaltet auf Timer-Aufnahmebereitschaft um.

Löschen einer Timer-Programmierung

1 Schalten Sie den Videorecorder ein.

2 Drücken Sie TIMER REC CHECK wiederholt, bis das zu löschende Programm im Display des Videorecorders angezeigt wird.

3 Drücken Sie TIMER REC CLEAR.
Zum Löschen anderer Programme wiederholen Sie die Schritte 2 und 3.

4 Sind noch Sendungen für timergesteuerte Aufnahme programmiert, so schalten Sie den Videorecorder auf Timer-Aufnahmebereitschaft zurück, indem Sie ihn ausschalten.

Ändern einer Timer-Programmierung

1 Schalten Sie den Videorecorder ein.

2 Drücken Sie TIMER REC CHECK wiederholt, bis das zu ändernde Programm im Display des Videorecorders angezeigt wird.
Modell SLV-225VP: Zum Abschalten der VPS-Funktion drücken Sie VPS.

3 Drücken Sie PROG +/– wiederholt, bis die zu ändernden Daten blinken.

4 Ändern Sie die Daten mit den Nummerntasten. (Zur Eingabe einer einstelligen Nummer drücken Sie zuerst die 0-Taste.)

5 Drücken Sie TIMER REC CHECK.
Der Videorecorder schaltet auf Timer-Aufnahmebereitschaft um.

Schutz vor versehentlichem Löschen

Um eine Aufzeichnung vor versehentlichem Löschen zu schützen, brechen Sie die Löschschutzlamelle der Cassette heraus. Soll diese Cassette später wieder zum Aufnehmen verwendet werden, überkleben Sie die Vertiefung mit einem Stück Klebeband.

Cassettengehäuse

Published in Heiloo, Holland.

11/15/15

Digitized by WWW.FREESERVICEMANUALS.INFO

Fortgeschrittener Betrieb (SLV-225AE/225VP)

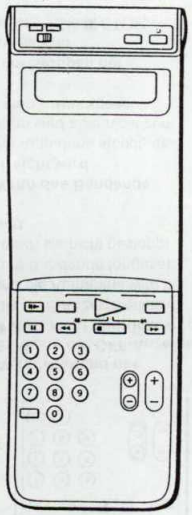

Streifen oder andere Störungen können bei Wiedergabe mit geänderter Geschwindigkeit nicht vollständig beseitigt werden.

Die verschiedenen Wiedergabe-Betriebsarten

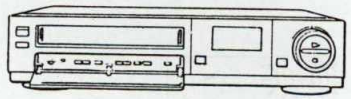

Wiedergabe-Pause

Drücken Sie II PAUSE während der Wiedergabe.
Zum Fortsetzen der normalen Wiedergabe drücken Sie II PAUSE erneut oder drücken Sie ► PLAY an der Fernbedienung oder die obere Hälfte des DUAL MODE SHUTTLE-Knopfes. Wenn das Gerät länger als etwa fünf Minuten auf Pause geschaltet bleibt, schaltet es automatisch auf Wiedergabe um.

Wenn das Standbild zittert
Stabilisieren Sie das Bild mit STILL ADJUST ▼/▲.

Bildsuchlauf

Bedienung am Videorecorder
Drehen Sie während der Wiedergabe, des Vorspulens oder des Rückspulens den DUAL MODE SHUTTLE-Knopf nach rechts in Richtung ►► (für Vorwärtsrichtung) oder nach links in Richtung ◄◄ (für Rückwärtsrichtung). Ein Hochgeschwindigkeits-Wiedergabebild erscheint dann auf dem TV-Schirm; der Ton bleibt jedoch stummgeschaltet. Beim Loslassen des Knopfes wird wieder in die vorausgegangene Betriebsart zurückgeschaltet.

Bedienung an der Fernbedienung
Halten Sie während der Wiedergabe, des Vorspulens oder des Rückspulens ►► FF oder ◄◄ REW gedrückt.
Zum Zurückschalten in die vorausgegangene Betriebsart lassen Sie die Taste los.

Verriegelter Bildsuchlauf

Drücken Sie während der Wiedergabe ⏪ SEARCH (für Rückwärtsrichtung) oder ⏩ SEARCH (für Vorwärtsrichtung). Auf dem TV-Schirm erscheint dann ein Hochgeschwindigkeits-Bild, und das Gerät bleibt auch beim Loslassen der Taste auf Hochgeschwindigkeit-Wiedergabe geschaltet. Zum Fortsetzen der normalen Wiedergabe drücken Sie ► PLAY an der Fernbedienung oder die obere Hälfte des DUAL MODE SHUTTLE-Knopfes.

Einzelbild-Weiterschaltung

Drücken Sie II PAUSE (Standbildbetrieb) und dann jedesmal II► FRAME zum Weiterschalten auf das nächste Bild.
Zum Fortsetzen der normalen Wiedergabe drücken Sie ► PLAY oder II PAUSE.

Es wird nur dann ein Indexpunkt gesetzt, wenn die Aufnahme aus dem Stoppbetrieb heraus gestartet wird
Wird die Aufnahme aus der Aufnahme-Pause heraus gestartet, setzt das Gerät keinen Indexpunkt.

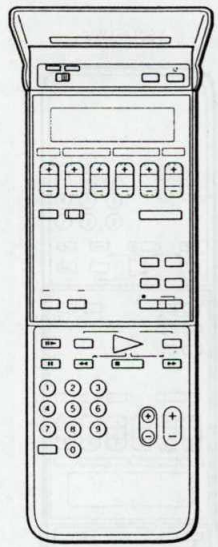

Verwendung der Index-Funktion

Aufzeichnungsteile des Bandes können durch Setzen von Indexpunkten markiert werden, um sie später leichter wiederfinden zu können.

Setzen von Indexpunkten

Wenn aus dem Stoppbetrieb heraus auf Aufnahme geschaltet wird, setzt das Gerät automatisch an der betreffenden Stelle einen Indexpunkt.

Aufsuchen von markierten Bandstellen — Index-Suchlauf

Mit der Index-Funktion kann durch Eingabe der Indexnummer die gewünschte Bandstelle automatisch aufgesucht und dort die Wiedergabe begonnen werden.
Bis zu 99 Punkte von der momentanen Bandposition entfernte Indexpunkte können aufgesucht werden.

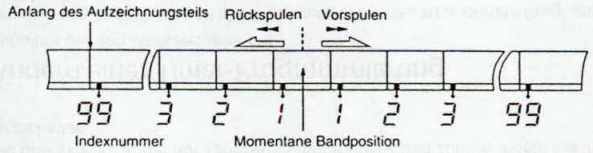

1 Legen Sie die Videocassette ein.

2 Drücken Sie INDEX, während sich das Gerät im Stopp- oder Wiedergabebetrieb befindet.
Die Index-Anzeige (Id) erscheint.

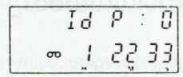

3 Geben Sie die gewünschte Indexnummer mit den Nummerntasten ein.
Die Indexnummer wird im Display des Videorecorders angezeigt.

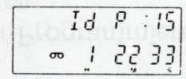

Published in Heiloo, Holland.
www.freeservicemanuals.info
11/15/15

Digitized by WWW.FREESERVICEMANUALS.INFO

4 Zum Aufsuchen einer weiter zurückliegenden Bandstelle drücken Sie ◄◄ REW.
Zum Aufsuchen einer weiter am Ende liegenden Bandstelle drücken Sie ►► FF.
Während das Band nun zurück- oder vorgespult wird, reduziert sich an jedem Indexpunkt die angezeigte Indexnummer, bis schließlich P:1 erreicht ist.
Danach beginnt automatisch die Wiedergabe.

Zum Abschalten des Index-Suchbetriebs nach Eingabe der Nummer

Drücken Sie INDEX erneut.

Anspielen der durch Indexpunkte markierten Aufzeichnungsteile — Index-Scan-Betrieb

Wie im folgenden erläutert, können die mit Indexpunkten markierten Aufzeichnungsteile nacheinander kurz angespielt werden.

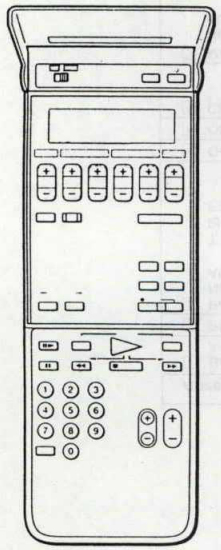

1 Legen Sie die Videocassette ein.

2 Drücken Sie INDEX, während sich das Gerät im Stopp- oder Wiedergabebetrieb befindet.
Die Index-Anzeige erscheint.

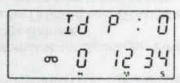

3 Drücken Sie ►► FF oder ◄◄ REW.

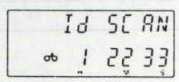

Der Videorecorder sucht nun im Rück- bzw. Vorspulbetrieb das Band nach Indexpunkten ab. Während der Suche nach dem ersten Indexpunkt erscheint Id SCAN im Display des Videorecorders.
Sobald ein Indexpunkt gefunden ist, schaltet der Videorecorder fünf Sekunden lang auf Wiedergabe, um anschließend den nächsten Indexpunkt aufzusuchen.

Zum Zurückschalten auf normale Wiedergabe

Drücken Sie während der fünfsekündigen Anspielphase die ► PLAY-Taste.

Zum Stoppen des Index-Scan-Betriebs

Drücken Sie ■ STOP.

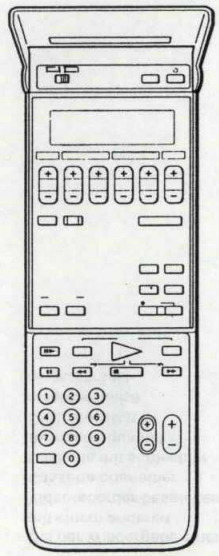

Verwendung des Bandzählers

Um einen bestimmten Bandpunkt für die Wiedergabe oder Aufnahme schnell auffinden zu können, kann der Zählerstand 0H00M00S abgespeichert werden. Beachten Sie jedoch, daß der Zähler nur an Stellen weiterzählt, an denen ein Signal aufgezeichnet ist.

1 Drücken Sie während der Wiedergabe oder Aufnahme COUNTER RESET an dem Punkt, der später aufgefunden werden soll. Der Zähler wird dann auf 0H00M00S zurückgesetzt.

2 Drücken Sie am Ende der Aufnahme bzw. Wiedergabe ■ STOP.

3 Drücken Sie COUNTER MEMORY, so daß die M-Anzeige im Display des Videorecorders erscheint.

4 Spulen Sie das Band durch Drücken von ◄◄ REW zurück.
Das Band stoppt kurz vor dem Zählerstand 0H00M00S. Wird ◄◄ REW erneut gedrückt, so zeigt der Bandzähler eine negative Zahl an. Um den Nullpunkt exakt aufzusuchen, drücken Sie ►► FF.

Zum Abschalten der Nullpunktspeicherfunktion

Drücken Sie COUNTER MEMORY.

Published in Heiloo, Holland.
www.freeservicemanuals.info
11/15/15

Digitized by WWW.FREESERVICEMANUALS.INFO

Anzeigen im Display des Videorecorders

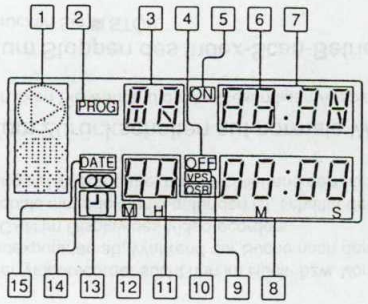

Anzeige	Funktion
1 Bandlauffunktions-Anzeigen	Erscheint während des Rückspulens, des Vorspulens, der Wiedergabe, der Pause usw.
2 PROG-Anzeige	Erscheint bei Einstellung des Timers.
3 Programmplatz-Nummer	Erscheint bei Einstellung des Timers.
AU	Erscheint beim Aufnehmen von Signalen der EURO-AV-Buchse.
T	Erscheint bei automatischer Spurlagen-Einstellung.
Id	Erscheint bei Index-Betrieb.
ER	Erscheint, wenn bei Drücken von TRANSMIT die Timerdaten nicht richtig zum Videorecorder übertragen wurden.
4 OFF-Anzeige	Erscheint beim Einstellen der Timer-Endzeit.
5 ON-Anzeige	Erscheint beim Einstellen der Timer-Startzeit.
6 CH/CC/S	Erscheint bei Empfang eines TV-Programms, eines Kabelprogramms und beim Löschen eines unerwünschten Programmplatzes.
7 Momentane Uhrzeit/ Spurlageneinstellung	Zeigt momentane Uhrzeit, Aufnahme-Startzeit des Timers und Spurlageneinstellung an.
FULL	Erscheint, wenn bereits sechs Timer-Aufnahmevorgänge programmiert sind.
SCAN	Erscheint während des Index-Suchlaufs.
8 Linearer Bandzähler/ Timer-Endzeit	Zeigt die durchgelaufene Bandlänge bei Aufnahme oder Wiedergabe, das Datum der timergesteuerten Aufnahme und die Timer-Endzeit an.
9 VPS-Anzeige (SLV-225VP)	Erscheint bei timergesteuerter Aufnahme mit Video-Programm-System.
10 QSR-Anzeige	Erscheint, wenn sich der Videorecorder im Soforttimer-Aufnahmebetrieb befindet.
11 Kanalnummer	Nummer des momentan eingestellten Kanals
12 M-Anzeige	Erscheint, wenn der Zähler-Nullpunkt abgespeichert wurde.
13 ⏲-Anzeige	Erscheint, während der Videorecorder auf Timer-Startzeit wartet.
14 ⊙⊙-Anzeige	Bestätigung, daß eine Cassette eingelegt ist.
15 DATE-Anzeige	Datum

Die automatische Spurlageneinstellung spricht automatisch (etwa vier Sekunden lang) an
Wenn das Band unmittelbar nach dem Einlegen der Cassette wiedergegeben wird.

Bei Wiedergabe einer Cassette mit Kopierschutz-System
Das Bild kann oben Störungen aufweisen. Es handelt sich dabei nicht um eine Störung des Geräts.

Bei der Wiedergabe einer mit einem anderen Videorecorder bespielten Cassette oder einer Cassette mit schlechter Aufnahmequalität
Die Bildqualität ist möglicherweise eingeschränkt.

Beseitigung von Bildstörungen

Normalerweise wird die Spurlage automatisch eingestellt, so daß keine Bildstörungen auftreten. Wenn das Bild dennoch einmal durch Schnee oder Streifen gestört sein sollte, nehmen Sie wie folgt eine automatische oder manuelle Spurlageneinstellung vor.

Automatische Spurlageneinstellung

Drücken Sie AUTO TRACKING während der Wiedergabe.
Die AUTO TRACKING-Anzeige leuchtet, und –:–– erscheint im Display des Videorecorders.

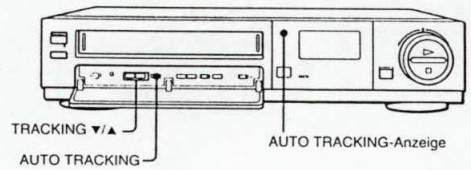

Manuelle Spurlageneinstellung

Wenn durch Drücken von AUTO TRACKING keine Verbesserung des Bildes erreicht werden konnte, stellen Sie die Spurlage wie folgt mit TRACKING ▼ oder ▲ manuell ein.

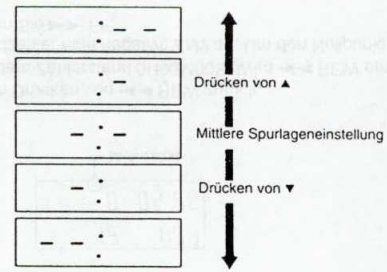

Etwa drei Sekunden nach Drücken der Taste erscheint wieder die Uhrzeit.

www.freeservicemanuals.info
Published in Heiloo, Holland.
11/15/15

Digitized by WWW.FREESERVICEMANUALS.INFO

Überspielen von Videobändern

Zum Überspielen von Videobändern verbinden Sie die beiden Videorecorder über ein 4pol EURO-AV-Kabel (Sony VMC-2104MS, nicht mitgeliefert). Der Videorecorder SLV-225 arbeitet dann als Wiedergabegerät, und der andere Videorecorder als Aufnahmegerät.

Hinweis zur gezeigten Anschlußkonfiguration
Es wird hier nur ein Beispiel vorgestellt. Besitzt Ihr Videorecorder andere Buchsen, wenden Sie sich bezüglich des Anschlusses an Ihren Sony Händler oder Ihre Sony Kundendienststelle.

Anschluß der beiden Videorecorder

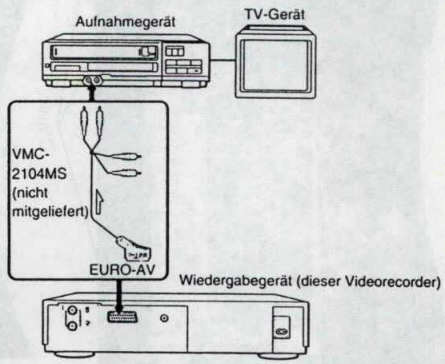

1 Schließen Sie den anderen Videorecorder (Aufnahmegerät) an das TV-Gerät an. (Zum Anschließen siehe die Anleitung des Videorecorders.)

2 Schließen Sie das EURO-AV-Kabel an die EURO-AV*-Buchse dieses Videorecorders und den gelben Stecker (Video) des Kabels an den Videoeingang des anderen Videorecorders an. Schließen Sie außerdem den roten oder weißen Stecker (Audio) an den Audioeingang des anderen Videorecorders an. (Handelt es sich um ein Stereogerät, schließen Sie beide Audiostecker (rot und weiß) an die Audioeingänge an).

3 Wählen Sie am anderen Gerät je nach Anschlußart den Line-Eingang 1 oder 2.

* Wenn am TV-Gerät bereits ein EURO-AV-Kabel angeschlossen ist, trennen Sie es vom TV-Gerät ab.

Schnittbetrieb

1 Legen Sie in diesen Videorecorder (Wiedergabegerät) die Zuspiel-Cassette und in den anderen Videorecorder (Aufnahmegerät) die Cassette, auf die aufgenommen werden soll, ein.

2 Suchen Sie am anderen Videorecorder (Aufnahmegerät) den Aufnahme-Startpunkt auf, und drücken Sie II PAUSE. Suchen Sie dann an diesem Videorecorder den Wiedergabe-Startpunkt auf, und drücken Sie II PAUSE.

3 Drücken Sie an diesem Videorecorder ► PLAY und am anderen Videorecorder ● REC.

4 Drücken Sie beide II PAUSE-Tasten gleichzeitig. Der Überspielbetrieb beginnt.

Zu NTSC-Aufzeichnungen
Bänder mit NTSC-Aufzeichnung können nicht auf einen anderen Videorecorder überspielt werden.

Verwendung der CONTROL S IN-Buchse

Wird dieser Videorecorder über ein Steuerkabel mit der CONTROL S OUT-Buchse eines anderen Sony Geräts verbunden, so kann er von dem anderen Sony Gerät aus ferngesteuert werden. Besitzt der andere Videorecorder eine CONTROL S OUT-Buchse und eine SYNCHRO EDIT-Taste, so ist ein präzises synchrongesteuertes Schneiden möglich.

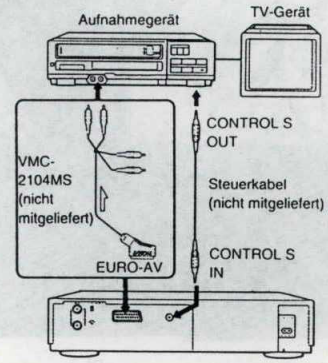

1 Legen Sie eine nicht gegen Aufnahme gesperrte Cassette in den anderen Videorecorder ein, und wählen Sie den Line-Eingang.

2 Legen Sie die Zuspiel-Cassette in diesen Videorecorder ein, und schalten Sie ihn auf Wiedergabe-Pause.

3 Schalten Sie den anderen Videorecorder auf Aufnahme-Pause.

4 Drücken Sie die SYNCHRO EDIT-Taste am anderen Videorecorder. Aufnahme und Wiedergabe beginnen gleichzeitig.

5 Zum Stoppen des Überspielbetriebs drücken Sie die SYNCHRO EDIT-Taste erneut.

Published in Heiloo, Holland.

www.freeservicemanuals.info

11/15/15

www.freeservicemanuals.info 11/15/15

Digitized by WWW.FREESERVICEMANUALS.INFO

SECTION 2
DISASSEMBLY

2-1. REMOVAL OF UPPER CASE

It is widen on both sides the back of upper case and remove up direction.

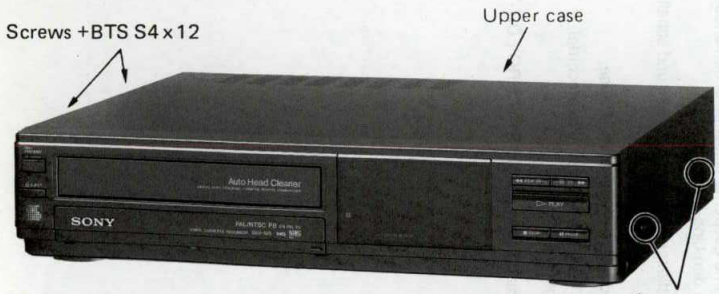

Photo: SLV-125 Fig. 2-1

Then remove the upper case.

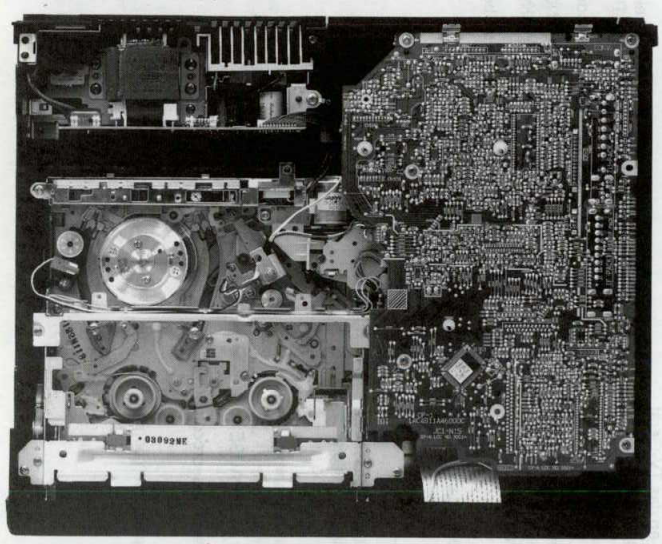

Fig. 2-2

2-2. REMOVAL OF BOTTOM PLATE

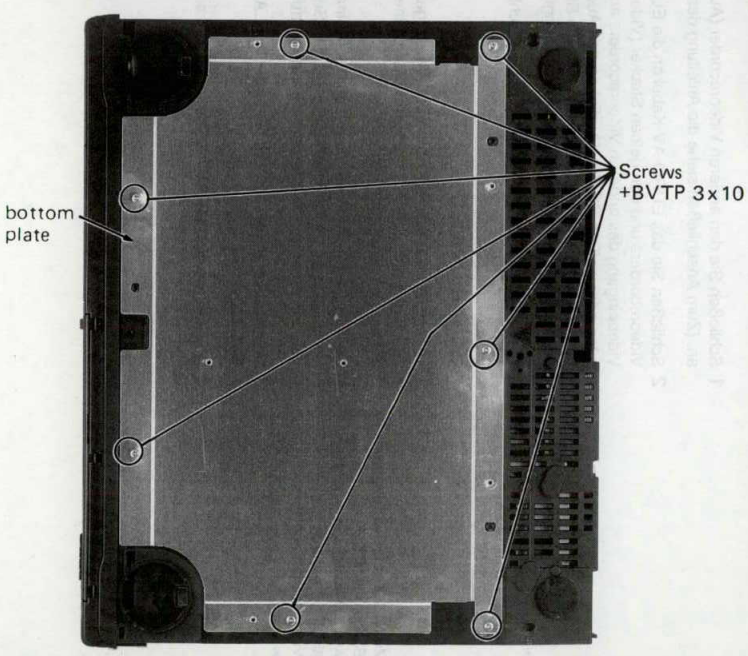

Fig. 2-3

Then remove the bottom plate.

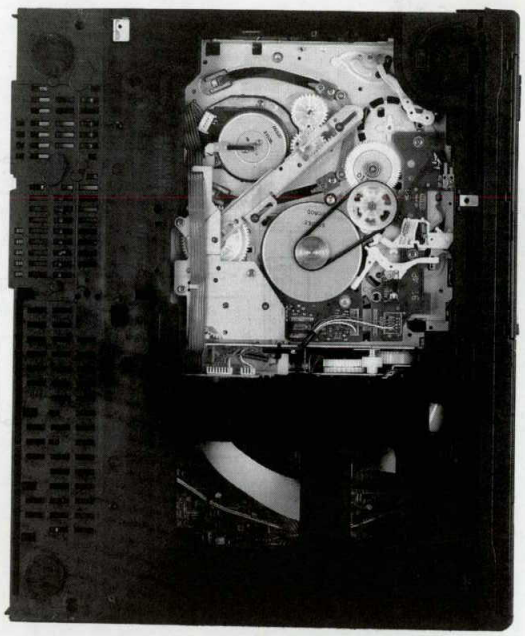

Fig. 2-4

2-3. REMOVAL OF FRONT CABINET

The remove the upper case, and bottom plate and raise up the claws front cabinet (three places) as shown by Fig. 2-5, and remove front cabinet in the arrow direction.

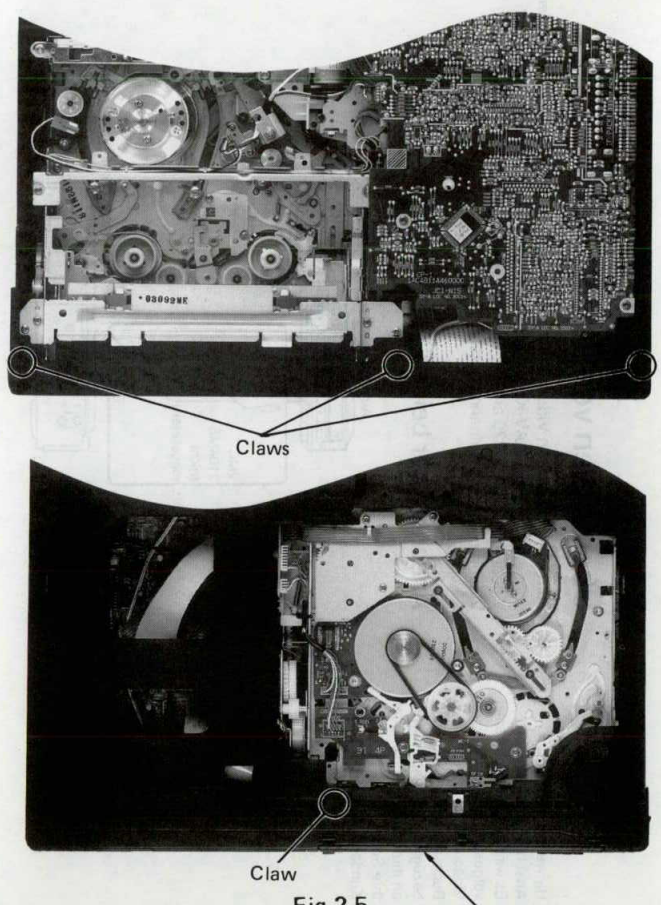

Fig 2-5.

Published in Heiloo, Holland.

www.freeservicemanuals.info 11/15/15

Digitized by WWW.FREESERVICEMANUALS.INFO

2-4. REMOVAL OF CP-1 BOARD ASSY

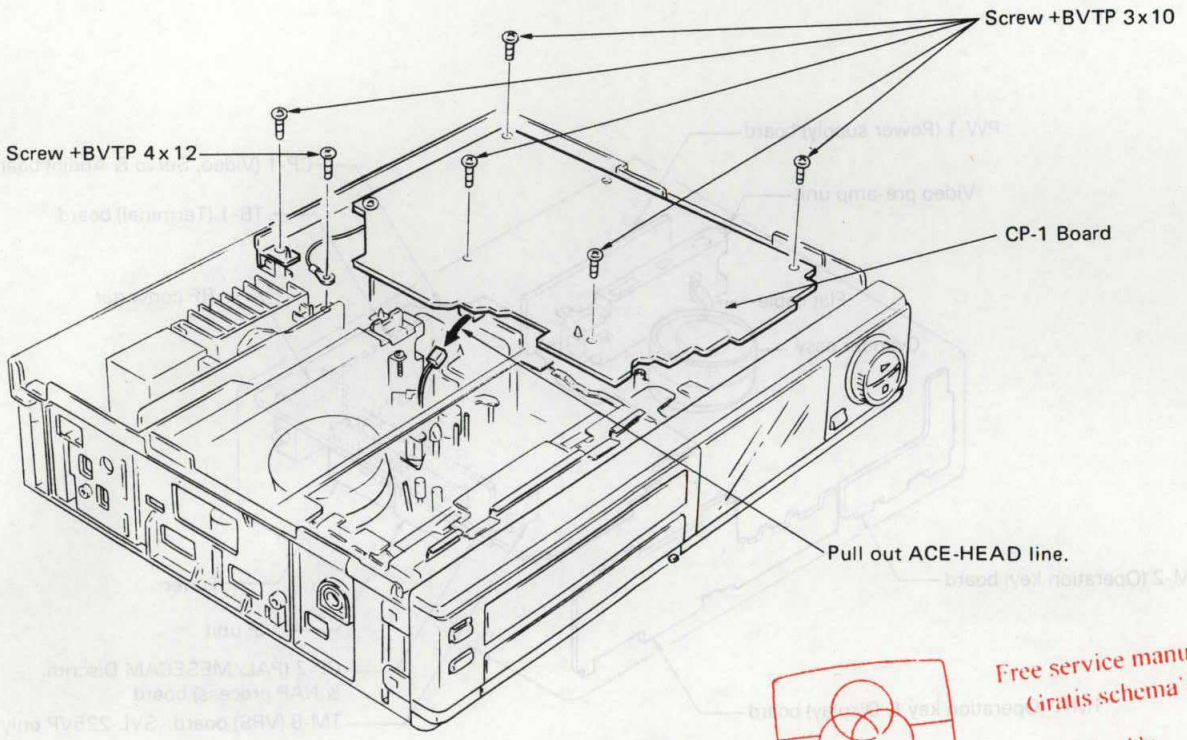

Fig 2-6.

Free service manuals
Gratis schema's
Digitized by
www.freeservicemanuals.info

Put it up on right side CP-1 BOARD ASSY.

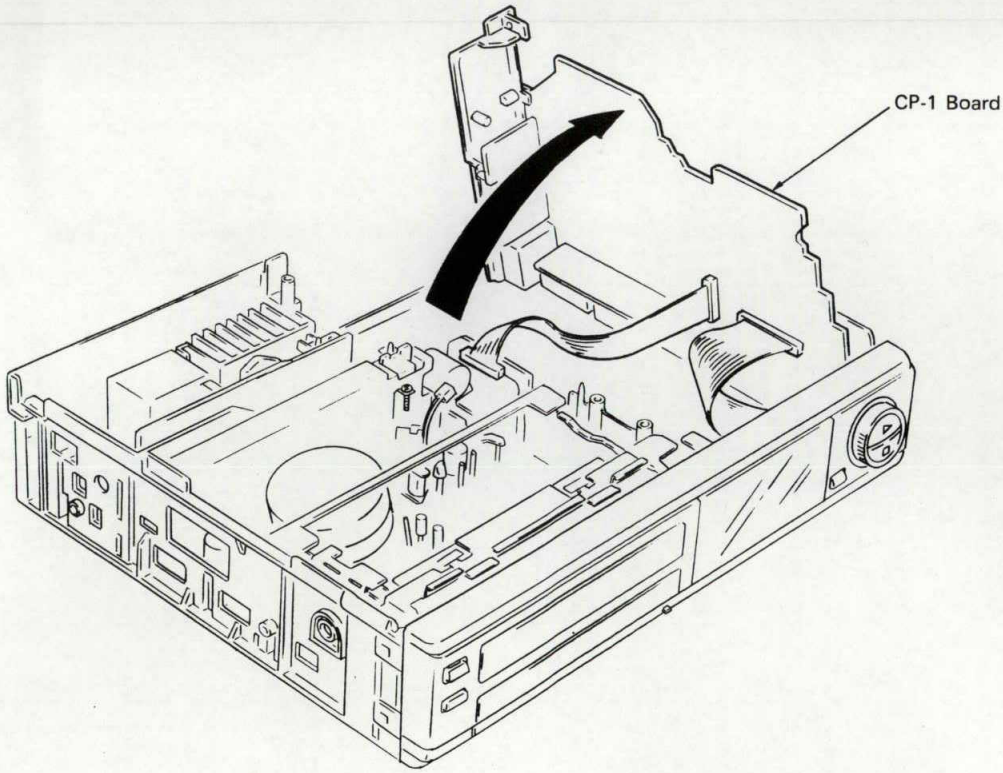

Fig 2-7.

Published in Heiloo, Holland.

www.freeservicemanuals.info 11/15/15

Digitized by WWW.FREESERVICEMANUALS.INFO

SECTION 3
DIAGRAMS

CIRCUIT BOARD LOCATIONS

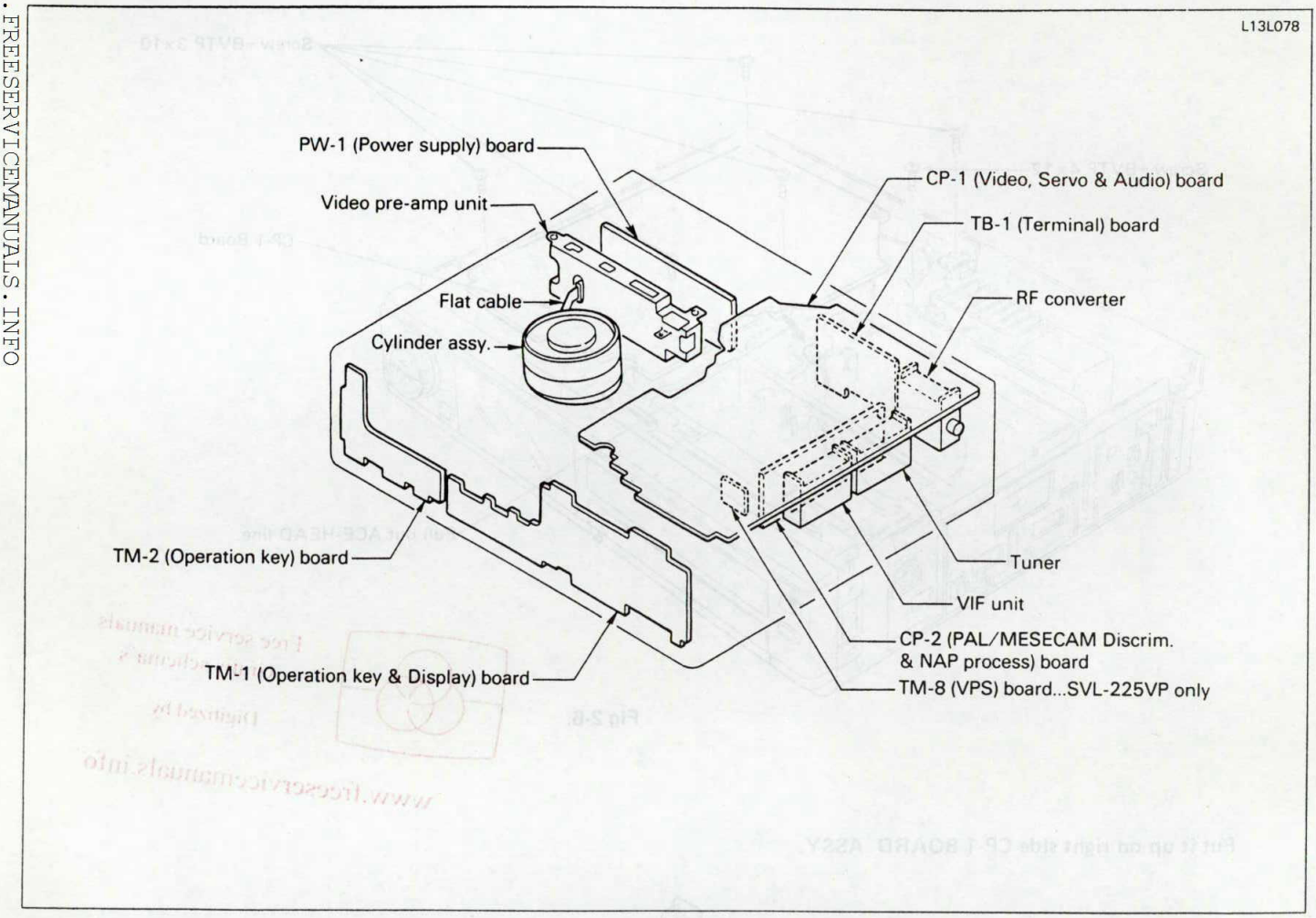

Published in Heiloo, Holland.

www.freeservicemanuals.info

Digitized by WWW.FREESERVICEMANUALS.INFO

OVERALL WIRING DIAGRAM

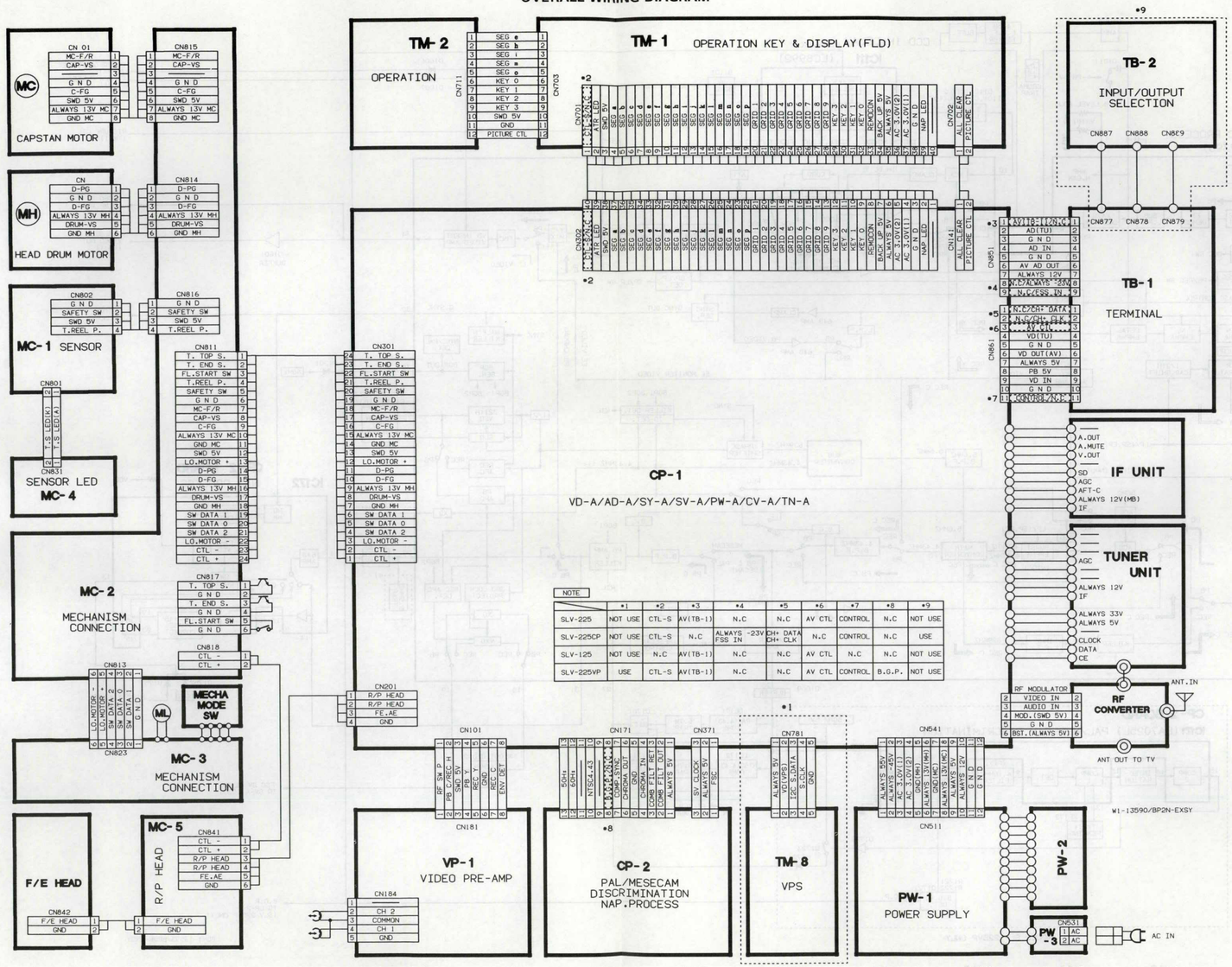

	*1	*2	*3	*4	*5	*6	*7	*8	*9
SLV-225	NOT USE	CTL-S	AV(TB-1)	N.C	N.C	AV CTL	CONTROL	N.C	NOT USE
SLV-225CP	NOT USE	CTL-S	N.C	ALWAYS -23V FSS IN	CH+ DATA CH+ CLK	N.C	CONTROL	N.C	USE
SLV-125	NOT USE	N.C	AV(TB-1)	N.C	N.C	AV CTL	N.C	N.C	NOT USE
SLV-225VP	USE	CTL-S	AV(TB-1)	N.C	N.C	AV CTL	CONTROL	B.G.P.	NOT USE

MECHANISM CONNECTION CIRCUIT DIAGRAM

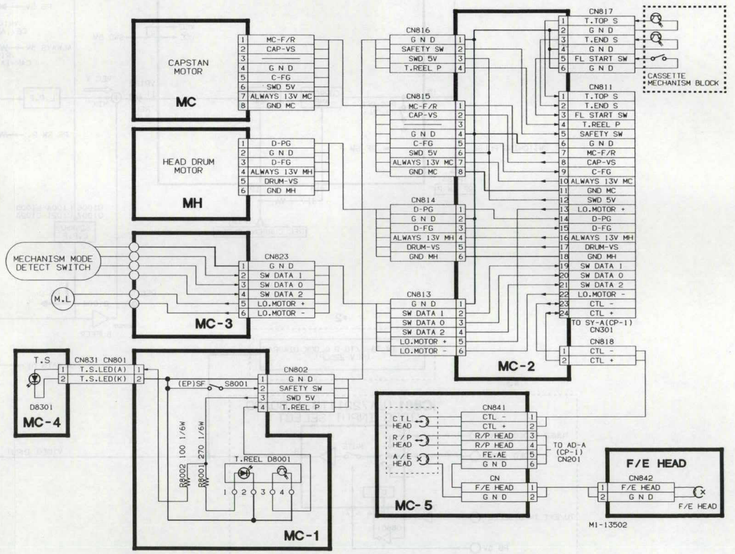

Published in Heiloo, Holland.

www.freeservicemanuals.info

Digitized by WWW.FREESERVICEMANUALS.INFO

VIDEO CIRCUIT BASIC BLOCK DIAGRAM

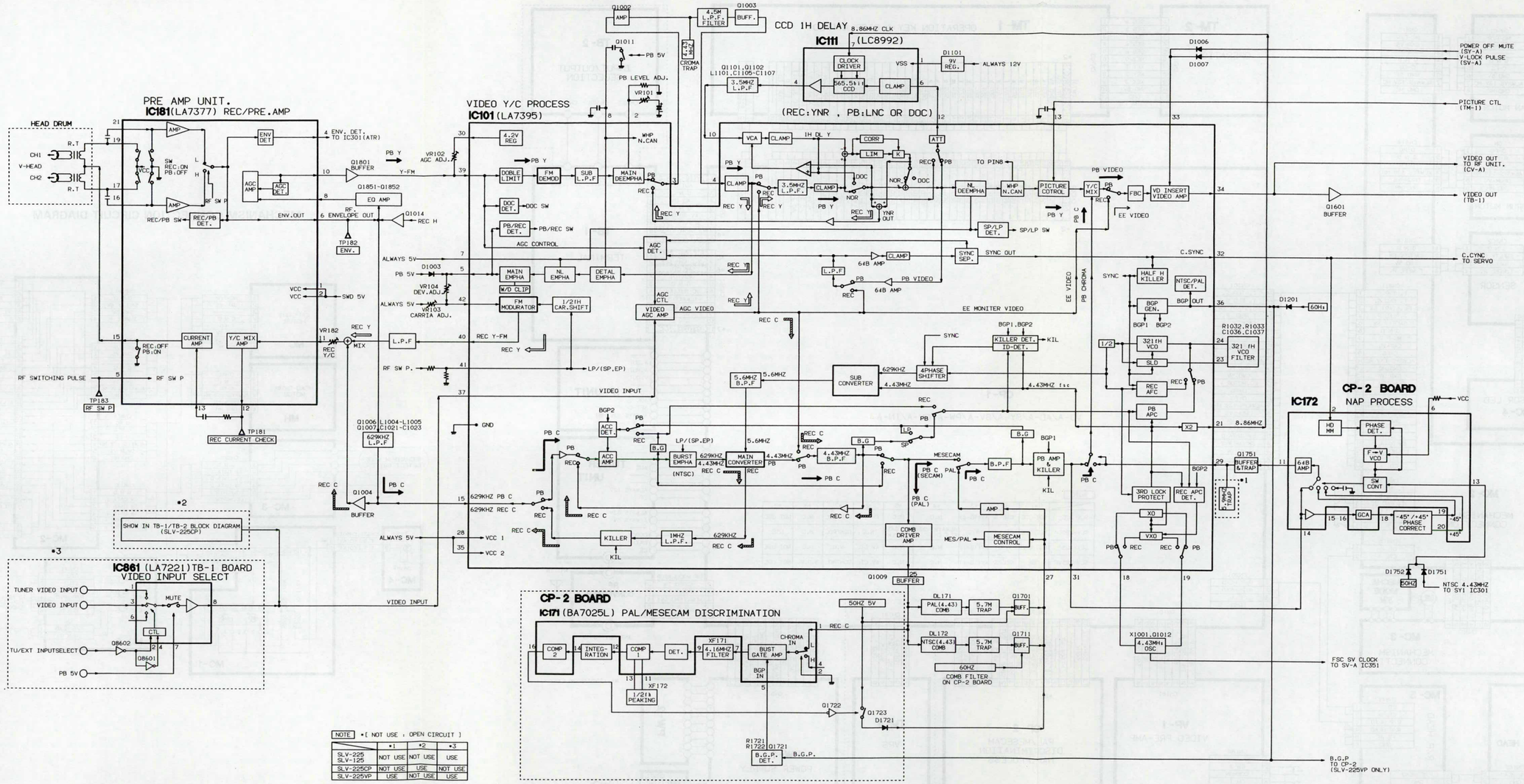

Published in Heiloo, Holland.

www.freeservicemanuals.info

Digitized by WWW.FREESERVICEMANUALS.INFO

SYSTEM CONTROL & SERVO CIRCUIT BASIC BLOCK DIAGRAM

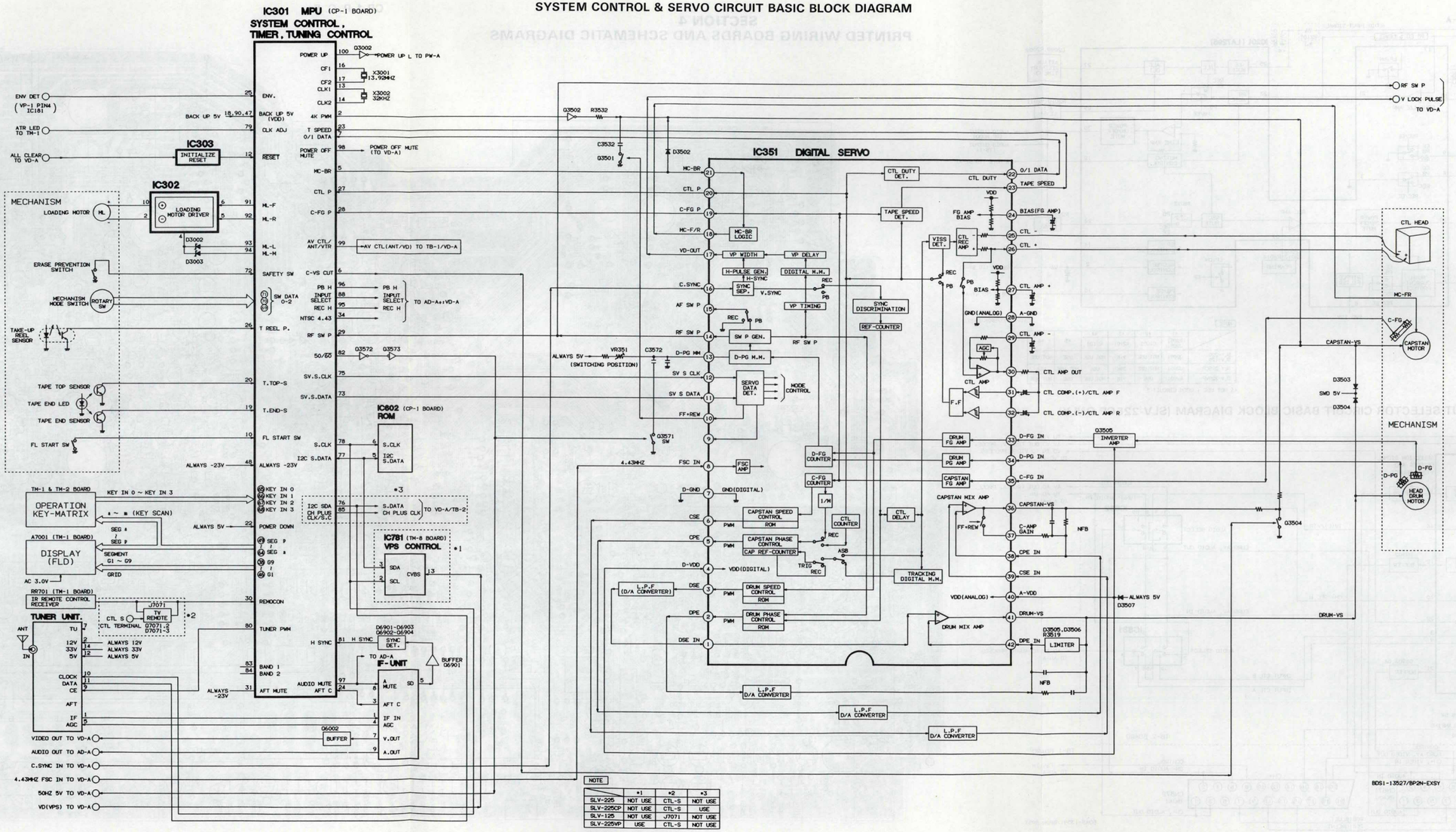

NOTE	*1	*2	*3
SLV-225	NOT USE	CTL-S	NOT USE
SLV-225CP	NOT USE	CTL-S	USE
SLV-125	NOT USE	J7071	NOT USE
SLV-225VP	USE	CTL-S	NOT USE

*[NOT USE : OPEN CIRCUIT]

Published in Heiloo, Holland.

www.freeservicemanuals.info

Digitized by WWW.FREESERVICEMANUALS.INFO

SECTION 4
PRINTED WIRING BOARDS AND SCHEMATIC DIAGRAMS

AUDIO CIRCUIT BASIC BLOCK DIAGRAM

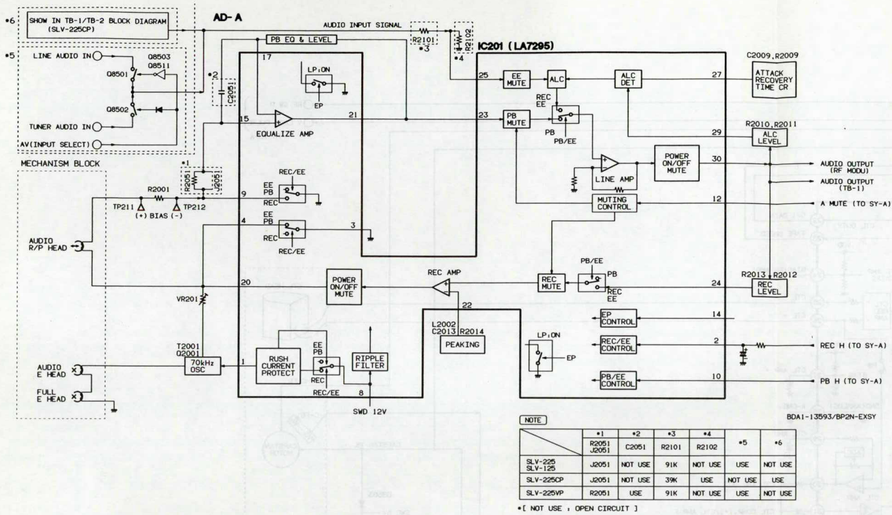

NOTE

	*1	*2	*3	*4	*5	*6
	R2051 J2051	C2051	R2101	R2102	*5	*6
SLV-225 SLV-125	J2051	NOT USE	91K	NOT USE	USE	NOT USE
SLV-225CP	J2051	NOT USE	39K	USE	NOT USE	USE
SLV-225VP	R2051	USE	91K	NOT USE	USE	NOT USE

*(NOT USE : OPEN CIRCUIT)

INPUT/OUTPUT SELECTOR CIRCUIT BASIC BLOCK DIAGRAM (SLV-225CP ONLY)

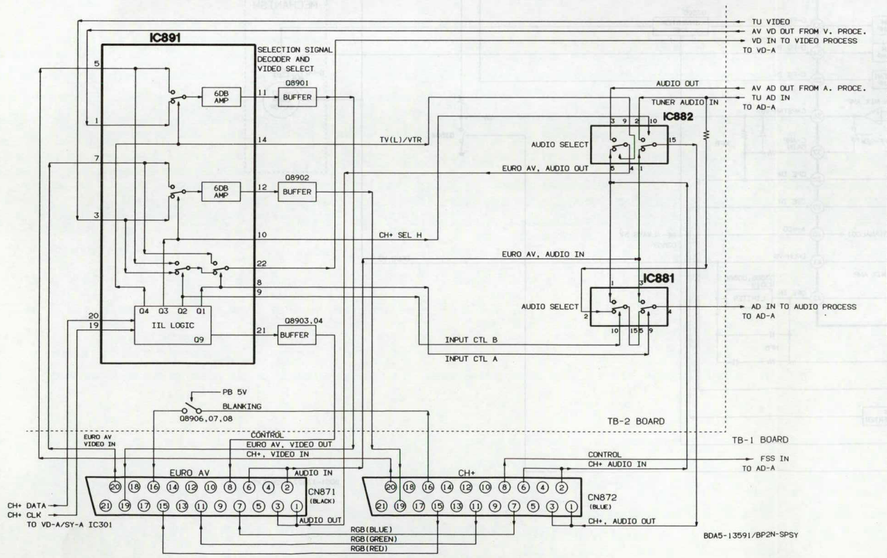

CP-1 P. C. B.

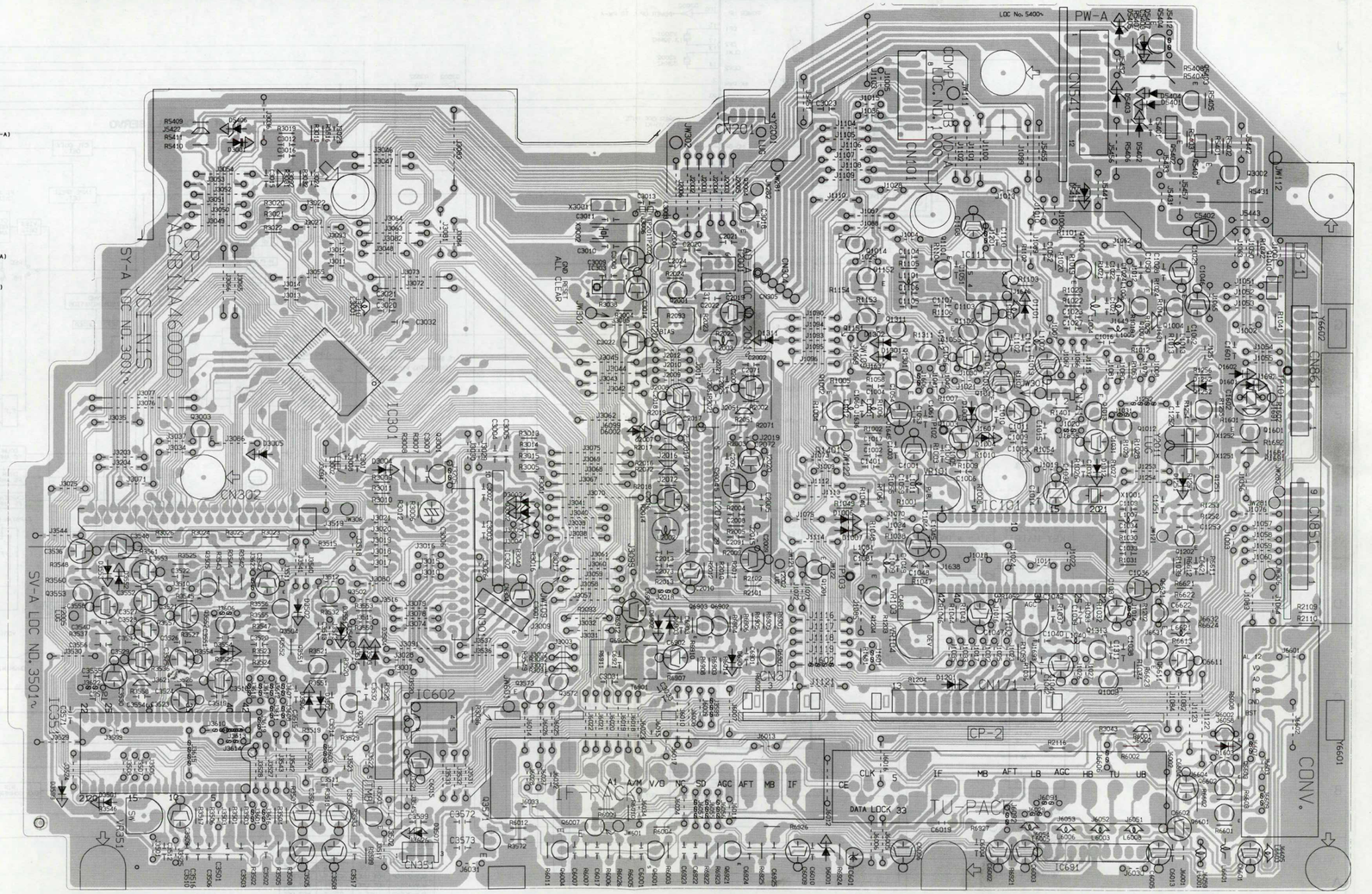

www.freeservicemanuals.info

Digitized by WWW.FREESERVICEMANUALS.INFO

CP-1 BOARD (PW-A) POWER SUPPLY CIRCUIT DIAGRAM

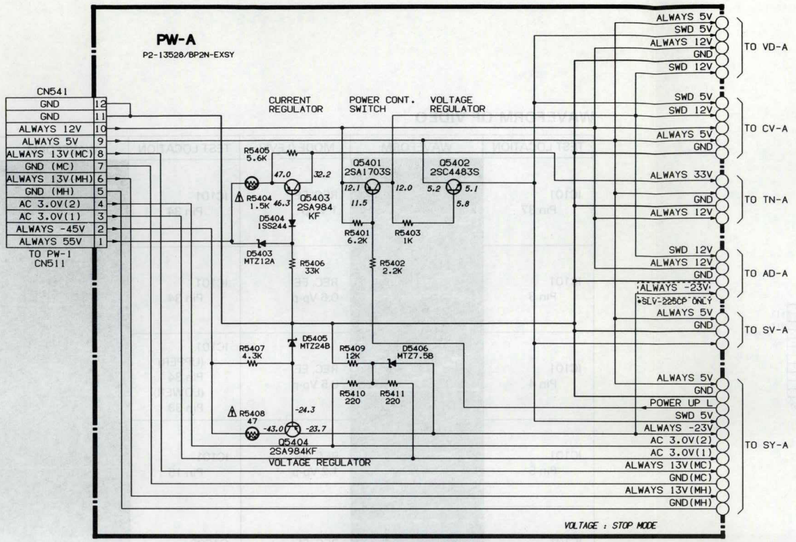

NOTES:

1. All resistance values in "OHMS" unless otherwise noted. (K=1,000 M=1,000,000)
2. All capacitance values in "μfd" unless otherwise noted. p=pico farad
3. All inductance values in "mH" unless otherwise noted. μ=micro henry

PRODUCT SAFETY NOTICE

THE COMPONENTS DESIGNATED BY A SYMBOL (⚠) IN THIS SCHEMATIC DIAGRAM DESIGNATES COMPONENTS WHOSE VALUE ARE OF SPECIAL SIGNIFICANCE TO PRODUCT SAFETY. SHOULD ANY COMPONENT DESIGNATED BY A SIMBOL NEED TO BE REPLACED, USE ONLY THE PART DESIGNATED IN THE PARTS LIST. DO NOT DEVIATE FROM THE RESISTANCE, WATTAGE AND VOLTAGE RATINGS SHOWN.

PW-1, 2, 3 BOARD POWER SUPPLY CIRCUIT DIAGRAM

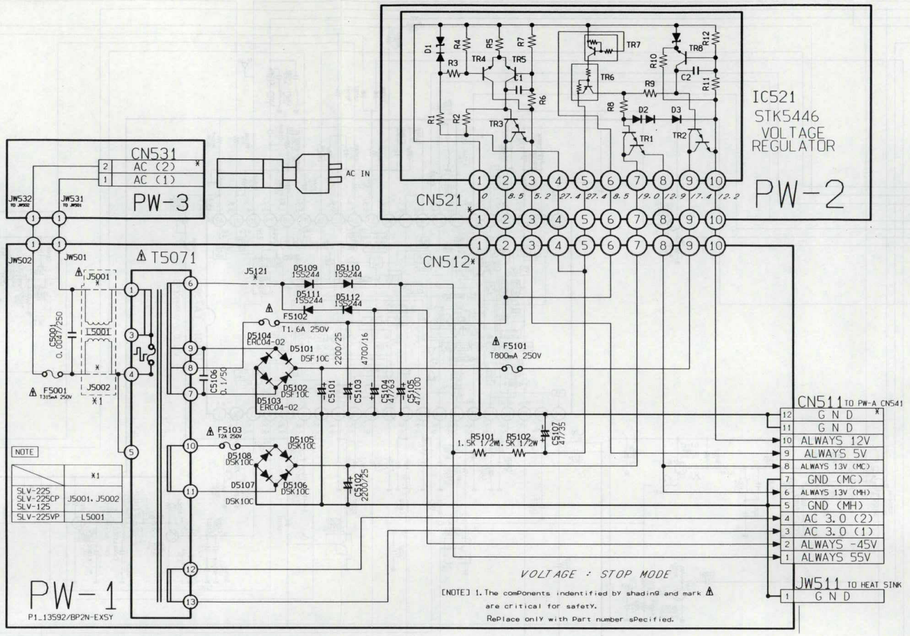

PW-1 P. C. B.

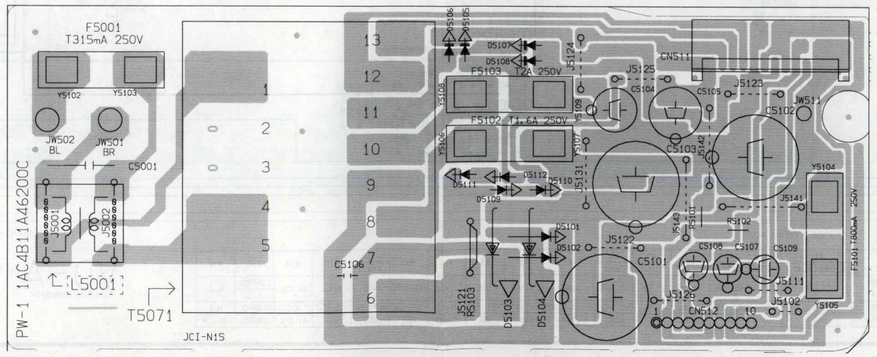

PW-2 P. C. B.

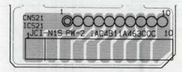

PW-3 P. C. B.

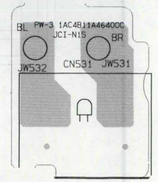

Published in Heiloo, Holland.

www.freeservicemanuals.info 11/15/15

Digitized by WWW.FREESERVICEMANUALS.INFO

CP-1 BOARD (VD-A) VIDEO CIRCUIT DIAGRAM

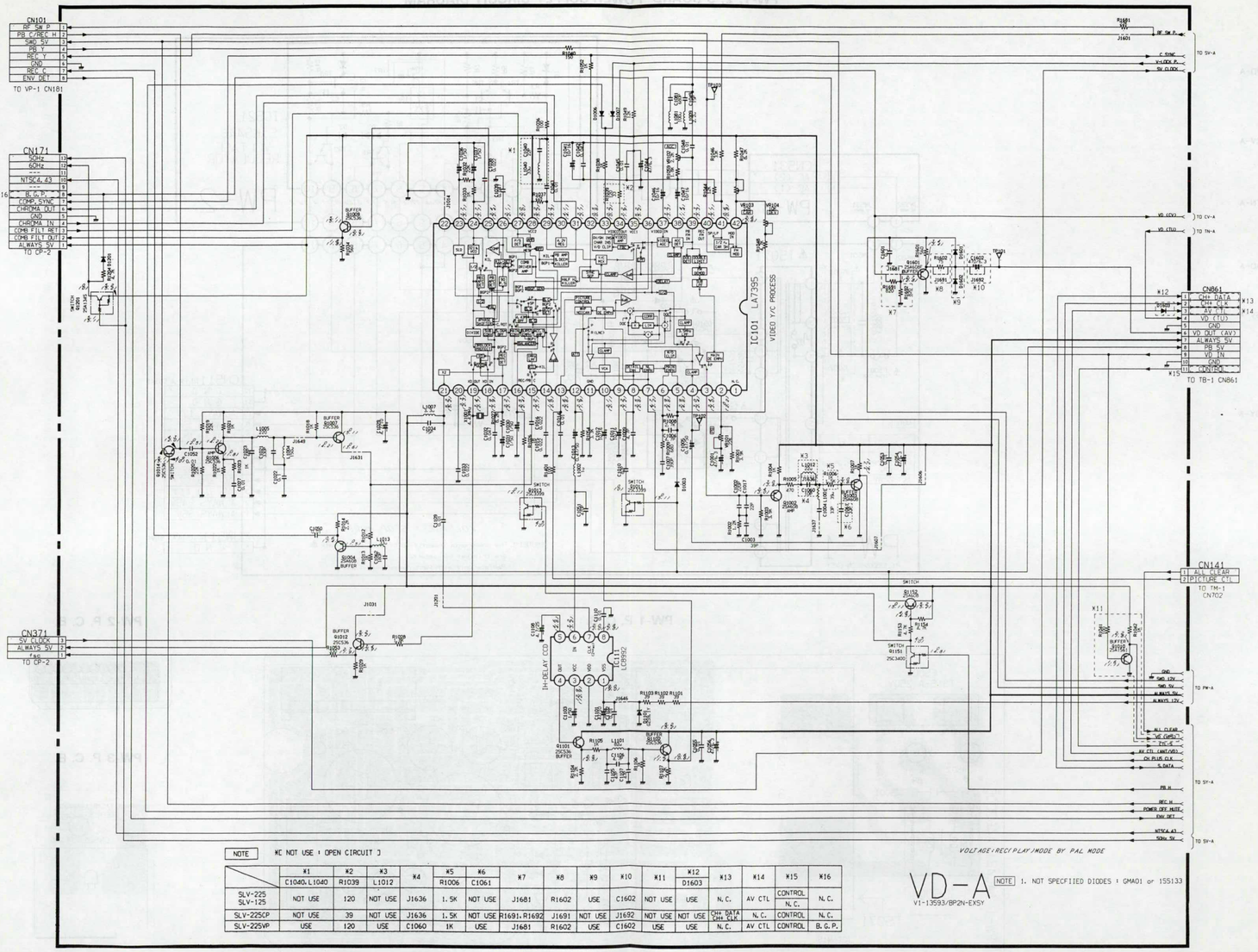

NOTE ※[NOT USE : OPEN CIRCUIT]

	※1 C1040,L1040	※2 R1039	※3 L1012	※4	※5 R1006	※6 C1061	※7	※8	※9	※10	※11	※12 D1603	※13	※14	※15	※16
SLV-225 SLV-125	NOT USE	120	NOT USE	J1636	1.5K	NOT USE	J1681	R1602	USE	C1602	NOT USE	USE	N.C.	AV CTL	CONTROL / N.C.	N.C.
SLV-225CP	NOT USE	39	NOT USE	J1636	1.5K	NOT USE	R1691,R1692	J1691	NOT USE	J1692	NOT USE	NOT USE	CH+ DATA CH+ CLK	N.C.	CONTROL	N.C.
SLV-225VP	USE	120	USE	C1060	1K	USE	J1681	R1602	USE	C1602	USE	USE	N.C.	AV CTL	CONTROL	B.G.P.

NOTE 1. NOT SPECFIIED DIODES : GMA01 or 1SS133

WAVEFORM OF VIDEO

WF-V-EP

TEST LOCATION	WAVEFORM	MODE/LEVEL	TEST LOCATION	WAVEFORM	MODE/LEVEL
IC101 Pin 37		REC, EE 1 Vp-p	IC101 Pin 34	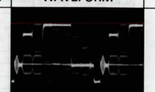	PB 2.5 Vp-p
IC101 Pin 3		REC, EE 0.6 Vp-p	IC101 Pin 34		REC, EE 2 Vp-p
IC101 Pin 4		REC, EE 0.5 Vp-p	IC101 (UPPER) Pin 34 (LOWER) Pin 33		STILL (UPPER) 2 Vp-p (LOWER) 5 Vp-p
IC101 Pin 5		REC, EE 1.2 Vp-p	IC101 Pin 15	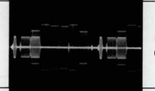	REC, EE 0.7 Vp-p
IC101 Pin 40	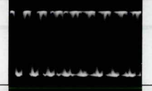	REC, EE 1.0 Vp-p	Q1006 Base	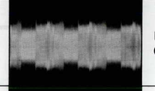	PB 0.2 Vp-p
IC101 Pin 39		PB 0.3 Vp-p	Q1007 Emitter		PB 0.25 Vp-p
IC101 Pin 3		PB 0.5 Vp-p	IC101 Pin 15		PB 0.25 Vp-p
IC101 Pin 4		PB 0.5 Vp-p	IC101 Pin 25		PB 1.0 Vp-p
IC101 Pins 10/12	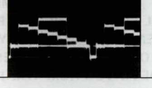	PB 0.3 Vp-p	IC101 Pin 31		PB 0.6 Vp-p

Published in Heiloo, Holland.

www.freeservicemanuals.info 11/15/15

Digitized by WWW.FREESERVICEMANUALS.INFO

VP-1 BOARD VIDEO PRE-AMP CIRCUIT DIAGRAM

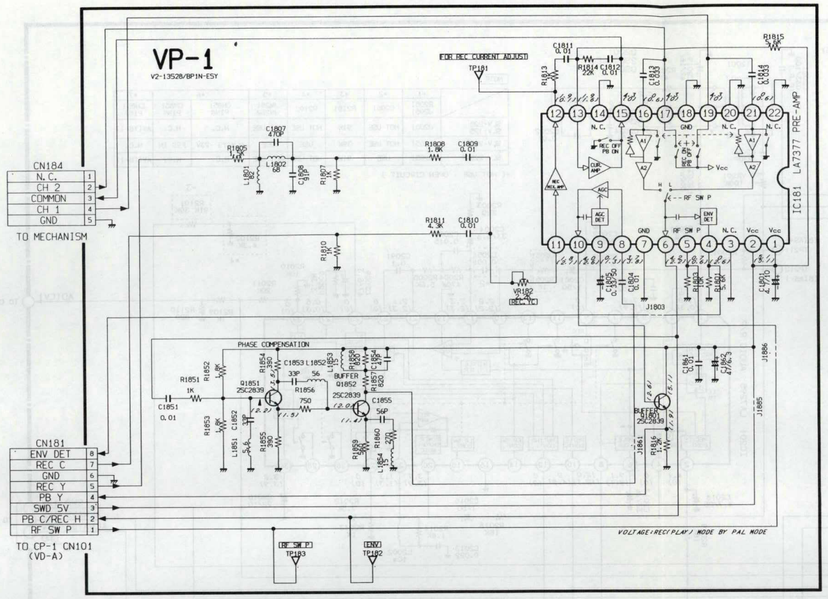

CP-1 BOARD (CV-A) RF CONVERTER CONNECTION CIRCUIT DIAGRAM

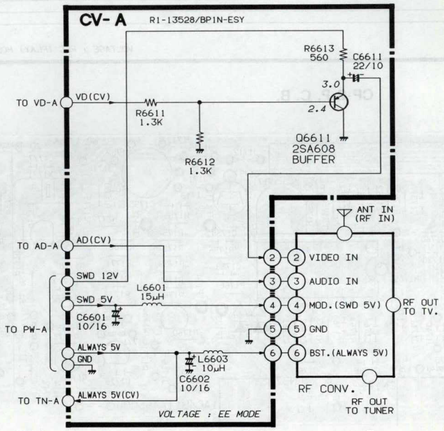

VP-1 P. C. B.

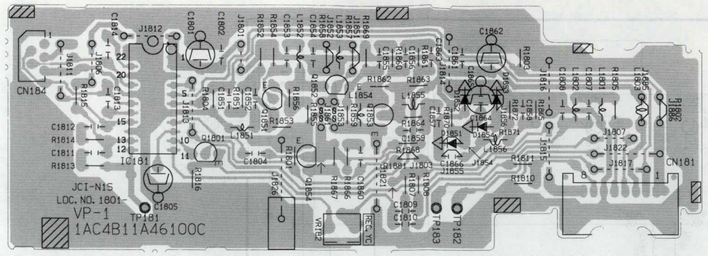

Free service manuals
Gratis schema's
Digitized by
www.freeservicemanuals.info

CP-1 BOARD (TN-A) TUNER IF CONNECTION CIRCUIT DIAGRAM

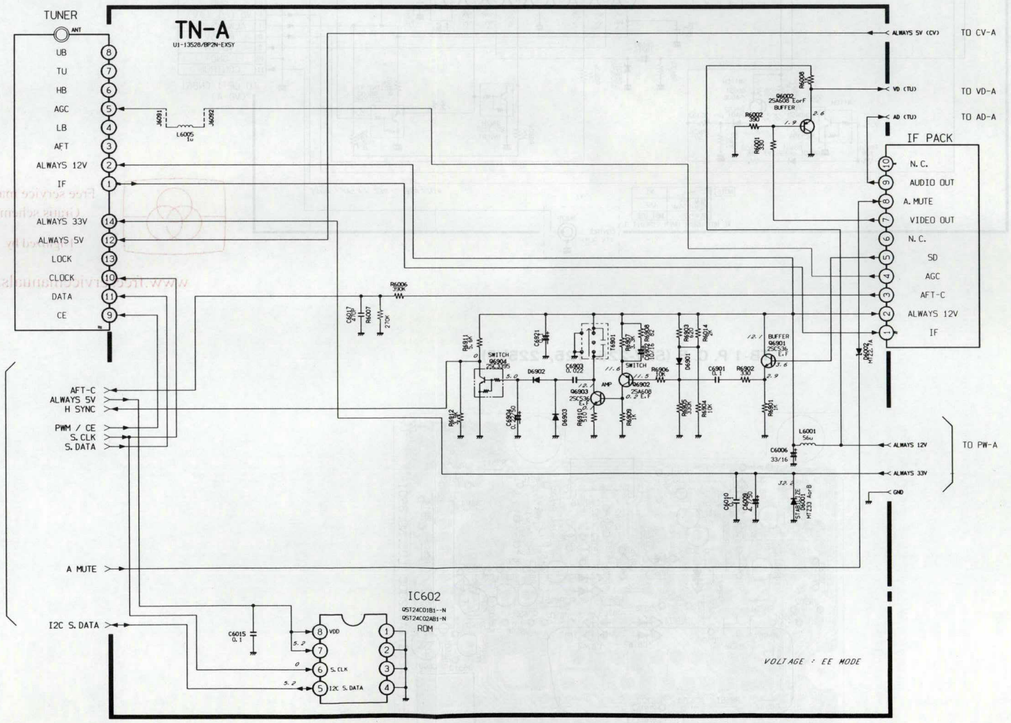

Published in Heiloo, Holland.

www.freeservicemanuals.info

Digitized by WWW.FREESERVICEMANUALS.INFO

TB-1 BOARD TERMINAL CIRCUIT DIAGRAM (SLV-225, 125, 225VP)

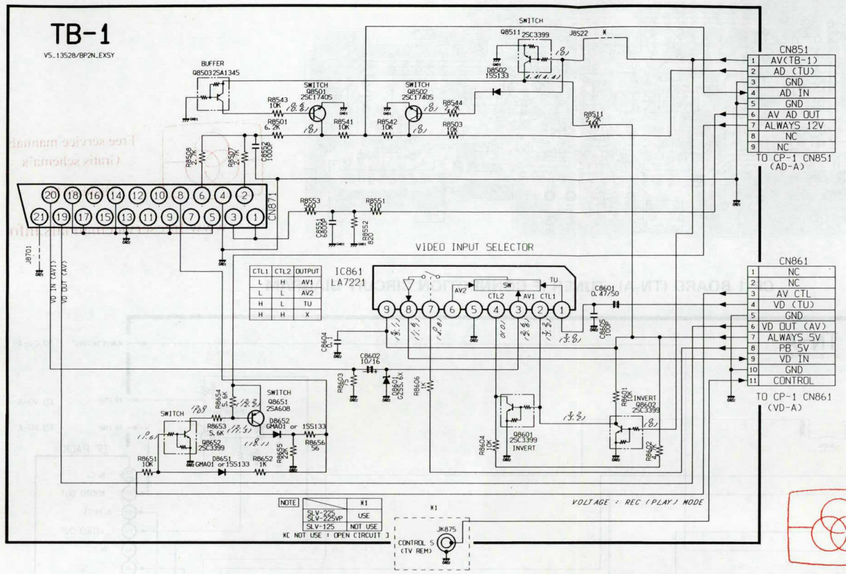

Free service manuals
Gratis schema's
Digitized by
www.freeservicemanuals.info

CP-1 BOARD (AD-A) AUDIO CIRCUIT DIAGRAM

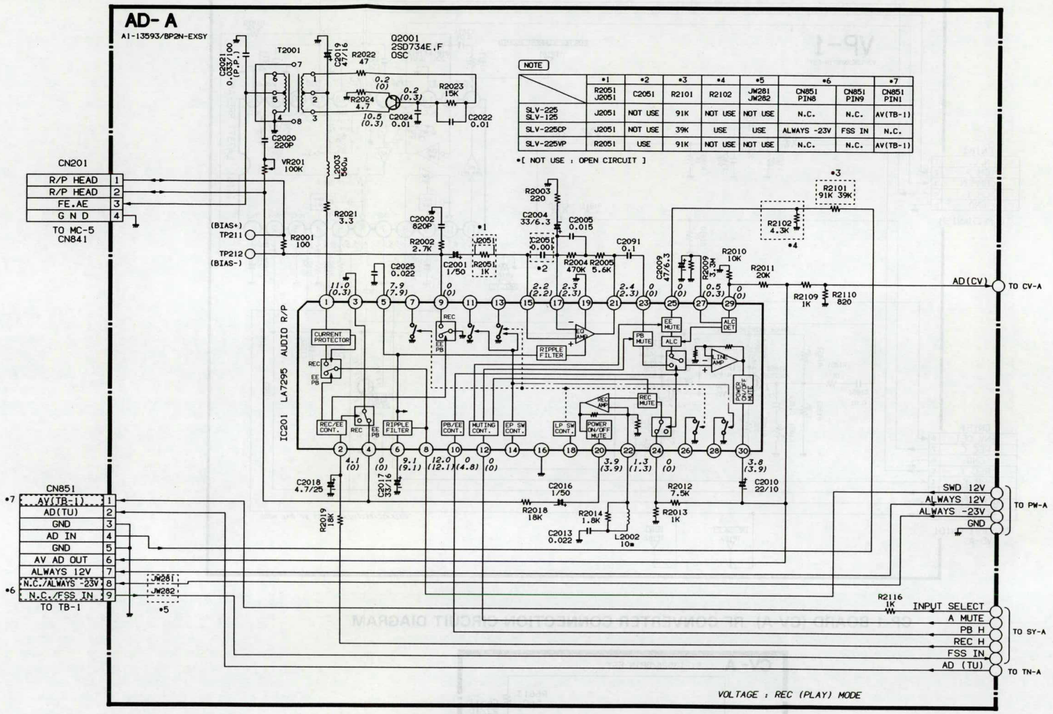

TB-1 P. C. B (SLV-225, 125, 225VP)

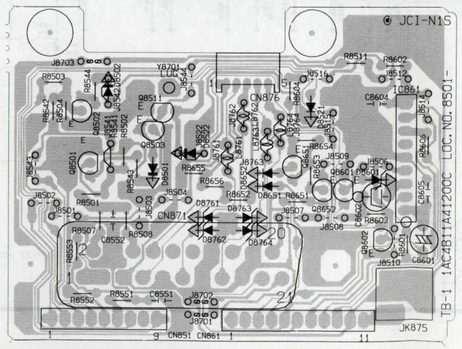

CP-2 P. C. B.

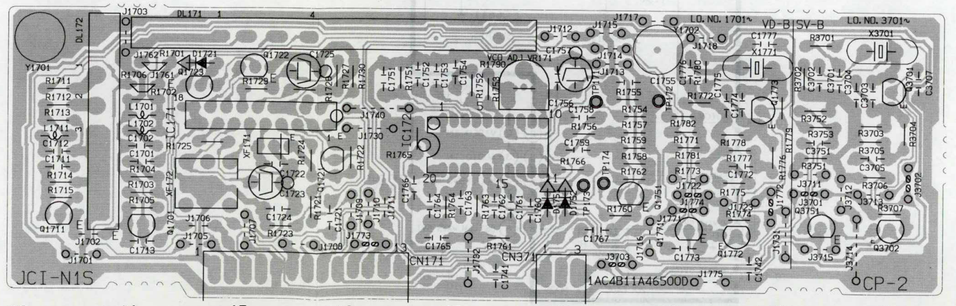

Published in Heiloo, Holland.

www.freeservicemanuals.info

11/15/15

Digitized by WWW.FREESERVICEMANUALS.INFO

CP-2 BOARD (VD-B, SV-B) PAL/MESECAM DISCRIMINATION & NAP PROCESS CIRCUIT DIAGRAM

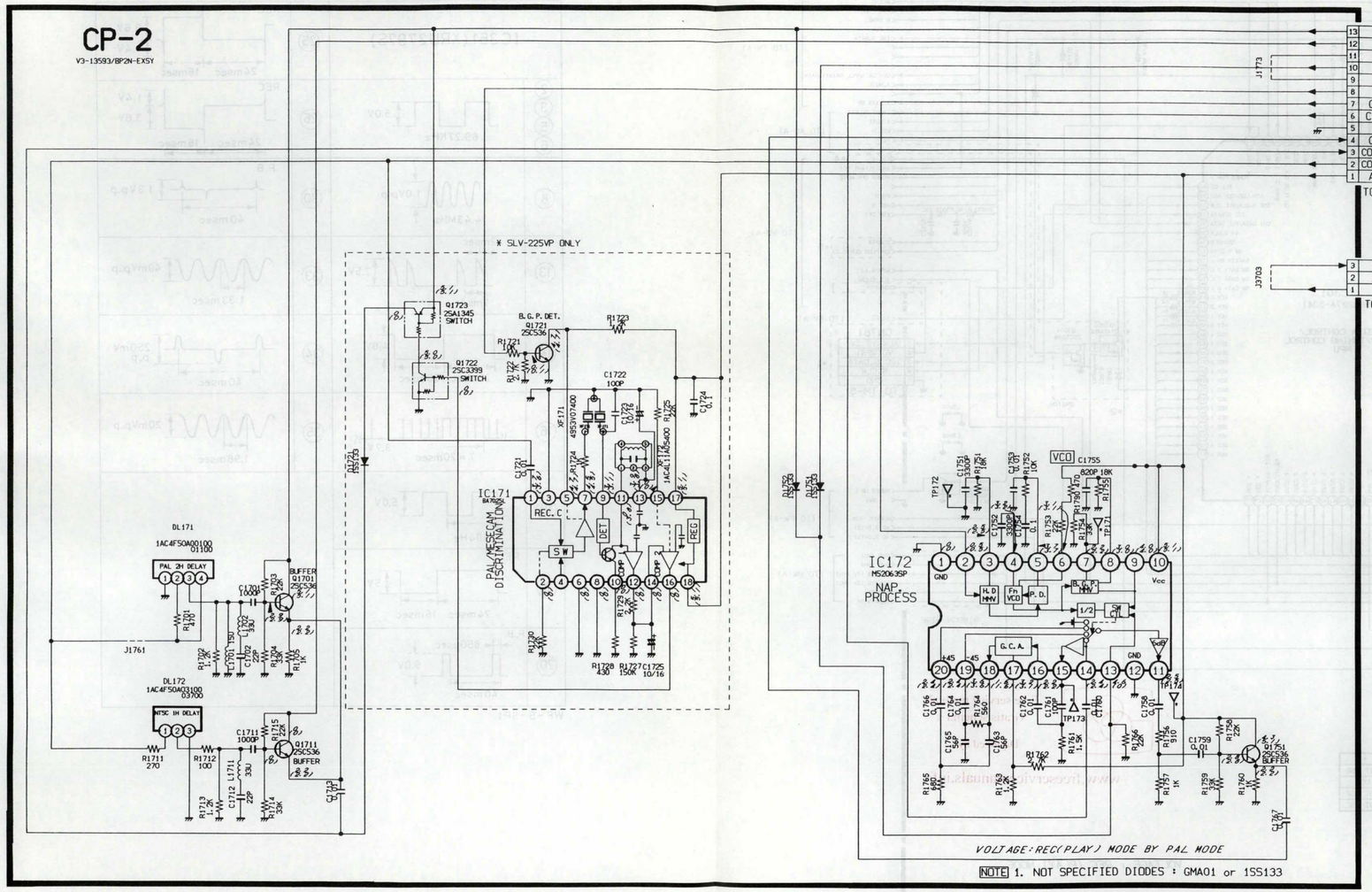

WAVEFORM OF PAL/MESECAM DISCRIMINATION & NAP CIRCUIT

WF-V2-EP

REC/PB MODE by MESECAM (Video Signal)			PLAY BACK MODE by NTSC PRE RECORDED TAPE		
TEST LOCATION	WAVEFORM	LEVEL	TEST LOCATION	WAVEFORM	LEVEL
IC171 Pin 1		1 Vp-p	IC172 Pin 2	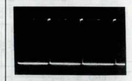	4.3 Vp-p
IC171 Pin 5	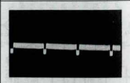	20m Vp-p	IC172 Pin 11		4.2 Vp-p
IC171 Pin 7	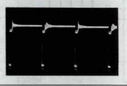	2.5 Vp-p	IC172 Pin 14		0.7 Vp-p
IC171 Pin 9		180m Vp-p	IC172 Pin 15	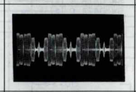	0.7 Vp-p
IC171 Pin 11		5 Vp-p	IC172 Pin 18		0.7 Vp-p
IC171 Pin 12		200m Vp-p			

Published in Heiloo, Holland.

www.freeservicemanuals.info

Digitized by WWW.FREESERVICEMANUALS.INFO

CP-1 BOARD (SY-A) SYSTEM CONTROL CIRCUIT DIAGRAM

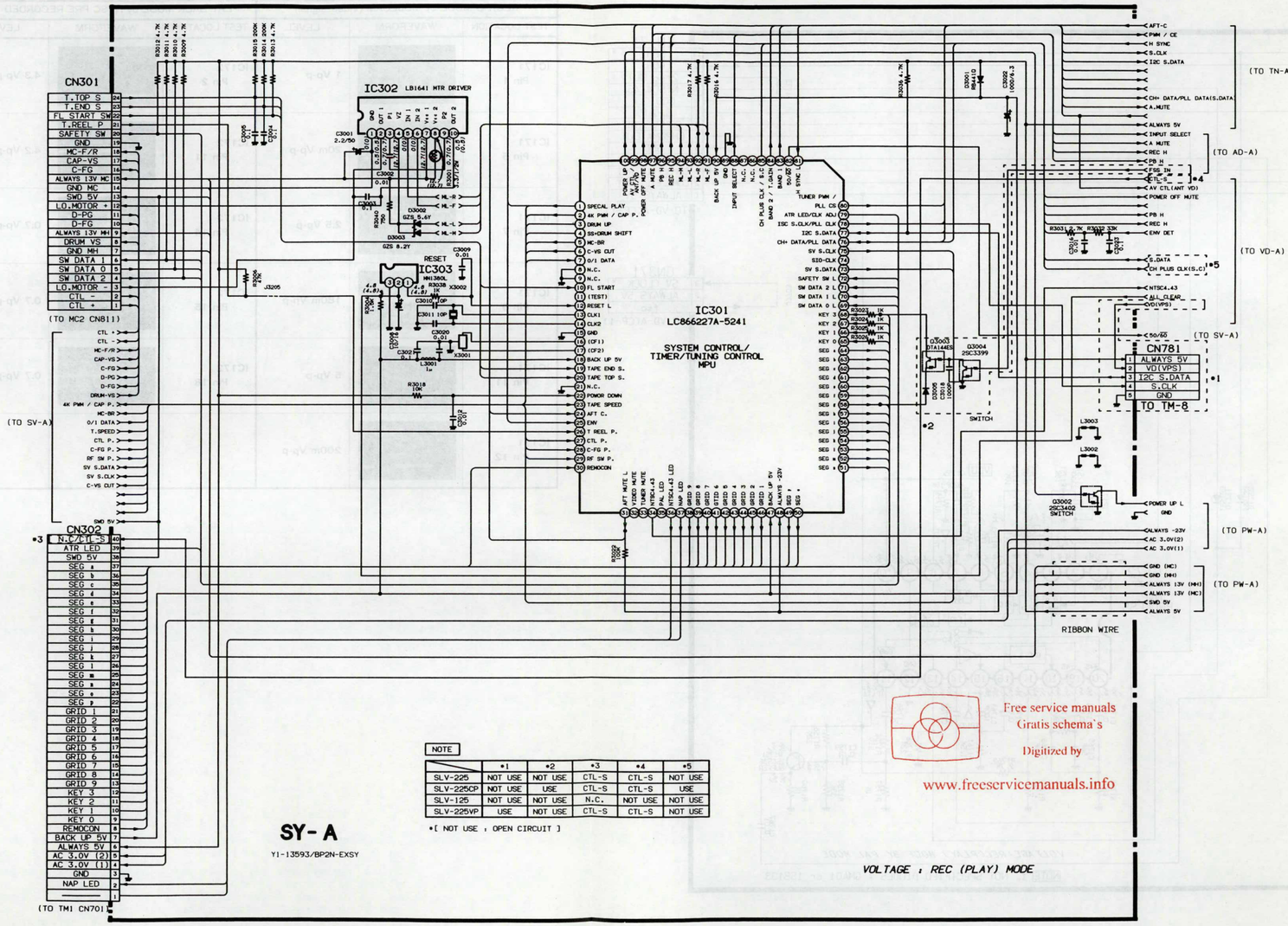

NOTE

	*1	*2	*3	*4	*5
SLV-225	NOT USE	NOT USE	CTL-S	CTL-S	NOT USE
SLV-225CP	NOT USE	USE	CTL-S	CTL-S	USE
SLV-125	NOT USE	NOT USE	N.C.	NOT USE	NOT USE
SLV-225VP	USE	NOT USE	CTL-S	CTL-S	NOT USE

*[NOT USE ; OPEN CIRCUIT]

SY-A

Y1-13593/BP2N-EXSY

VOLTAGE : REC (PLAY) MODE

Free service manuals
Gratis schema's
Digitized by
www.freeservicemanuals.info

WAVEFORM OF SERVO

IC351(XRU2797S)

2 3 5 6	69.27KHz, 5.0V	25	REC, 3.6V, 1.4V, 24msec, 16msec
8	4.43MHz, 1.0Vp-p	26	REC, 1.4V, 3.6V, 24msec, 16msec
13	2msec, 7msec, 2.5V	30	P.B., 1.3Vp-p, 40msec
14	20msec, 20msec, 4.8V	33	1.33msec, 40mVp-p
16	T = 20msec, 3.7V	34	40msec, 250mV p-p
19	504Hz, 5.0V	35	1.98msec, 20mVp-p
20	REC, 24msec, 16msec, 5V		
20	P.B., 850µsec, 40msec, 5.0V		

WF-S-SP1

Published in Heiloo, Holland.

www.freeservicemanuals.info 11/15/15

Digitized by WWW.FREESERVICEMANUALS.INFO

CP-1 BOARD (SV-A) SERVO CIRCUIT DIAGRAM

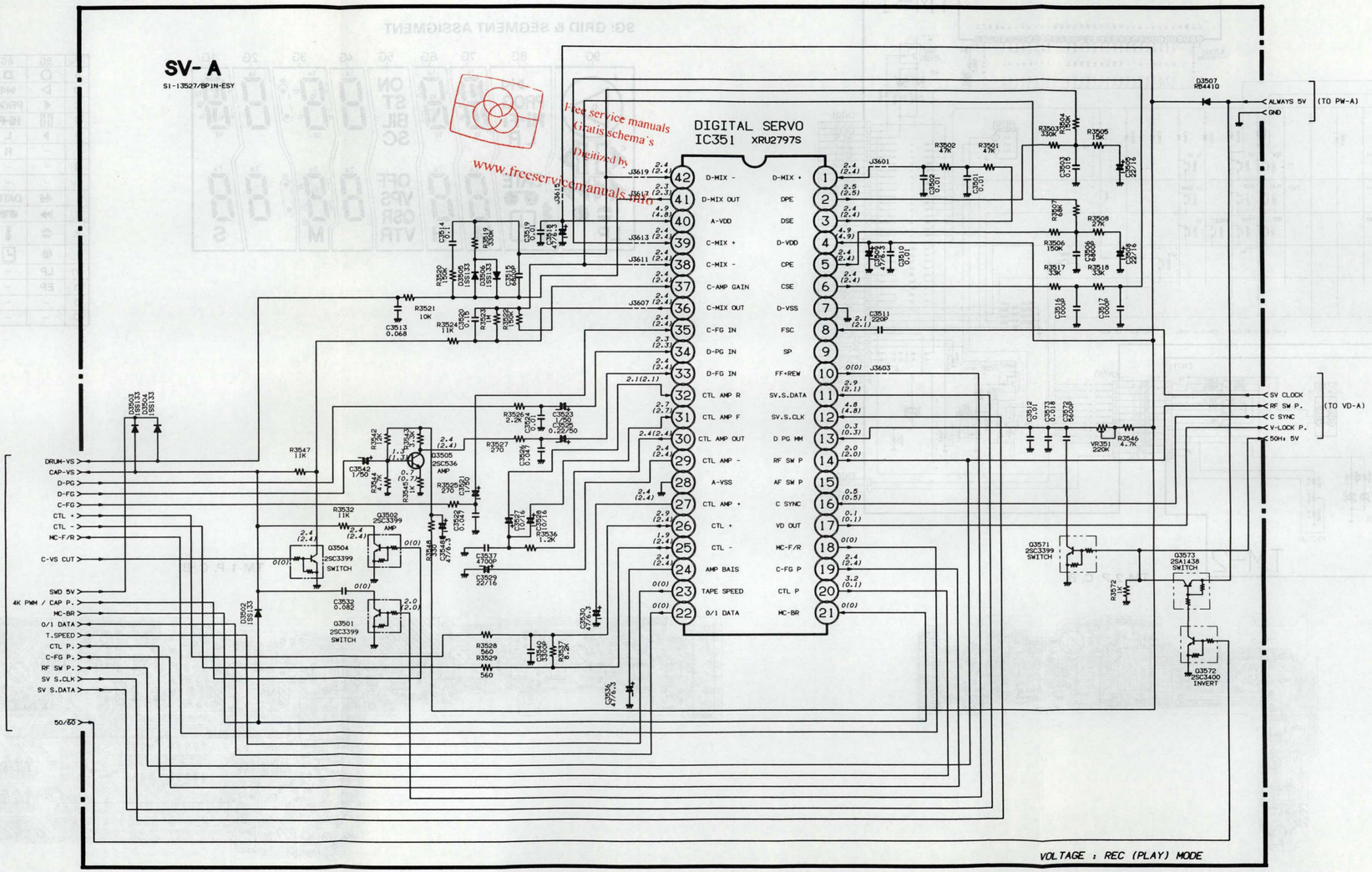

Free service manuals
Gratis schema's
Digitized by
www.freeservicemanuals.info

Published in Heiloo, Holland.

www.freeservicemanuals.info

Digitized by WWW.FREESERVICEMANUALS.INFO

TM-1, 2 BOARD OPERATION KEY & DISPLAY (FLD) CIRCUIT DIAGRAM

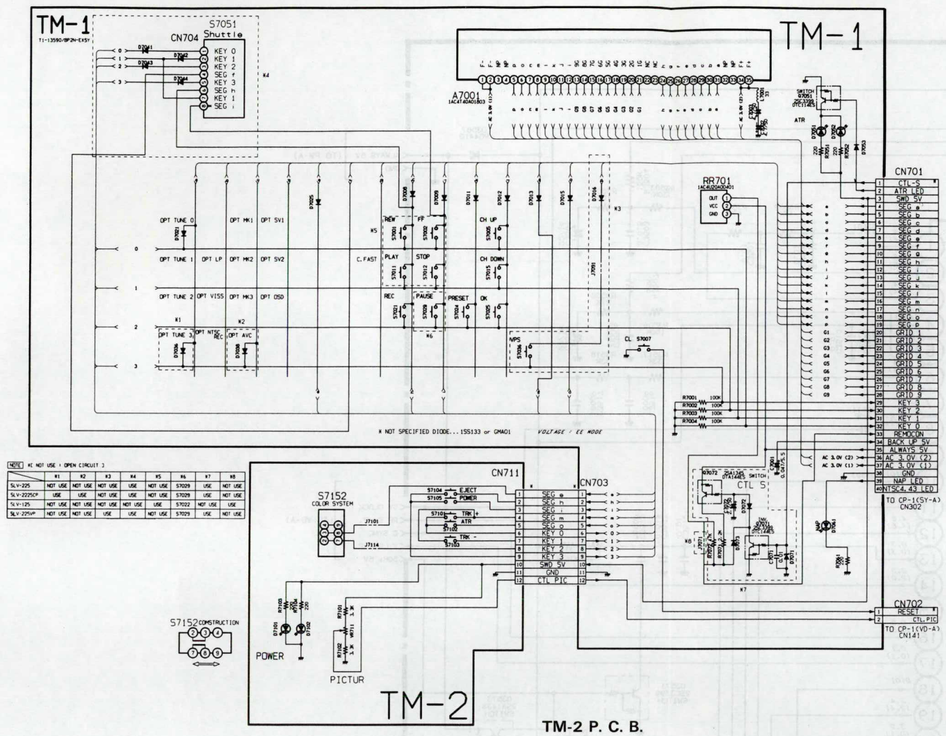

A7101 DISPLAY (FLD) GRID/ANODE ASSIGNMENT DRAWING & TABLE

9G: GRID & SEGMENT ASSIGMENT

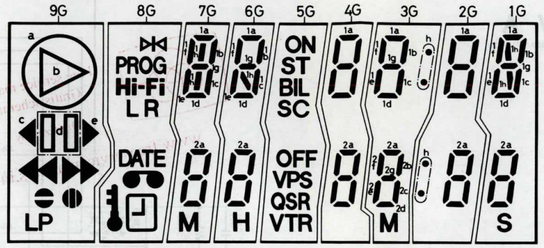

ANODE CONNECTION

	9G	8G	7G	6G	5G	4G	3G	2G	1G
a	○	◘	1a	1a	**ON**	1a	1a	1a	1a
b	▷	⏭	1b	1b	**ST**	1b	1b	1b	1b
c	◀	**PROG**	1c	1c	**BIL**	1c	1c	1c	1c
d	▯▯	**Hi-Fi**	1d	1d	**SC**	1d	1d	1d	1d
e	▶	**L**	1e	1e	–	1e	1e	1e	1e
f	–	**R**	1f	1f	–	1f	1f	1f	1f
g	–	–	1g	1g	–	1g	1g	1g	1g
h	–	–	1h	1h	–	–	•(UPPER)	•(LOWER)	1h
i	◀◀	**DATE**	2a	2a	**OFF**	2a	2a	2a	2a
j	▶▶	◓	2b	2b	**VPS**	2b	2b	2b	2b
k	⏏	ℹ	2c	2c	**QSR**	2c	2c	2c	2c
l	◉	⏲	2d	2d	**VTR**	2d	2d	2d	2d
m	**LP**	–	2e	2e	–	2e	2e	2e	2e
n	**EP**	–	2f	2f	–	2f	2f	2f	2f
o	–	–	2g	2g	–	2g	2g	2g	2g
p	–	–	**M**	**H**	–	**H**	**M**	**M**	**S**

9G/QP

TM-2 P. C. B.

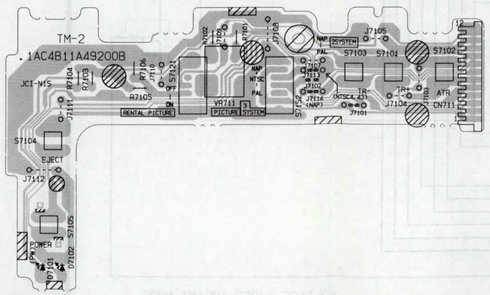

TM-1 P. C. B.

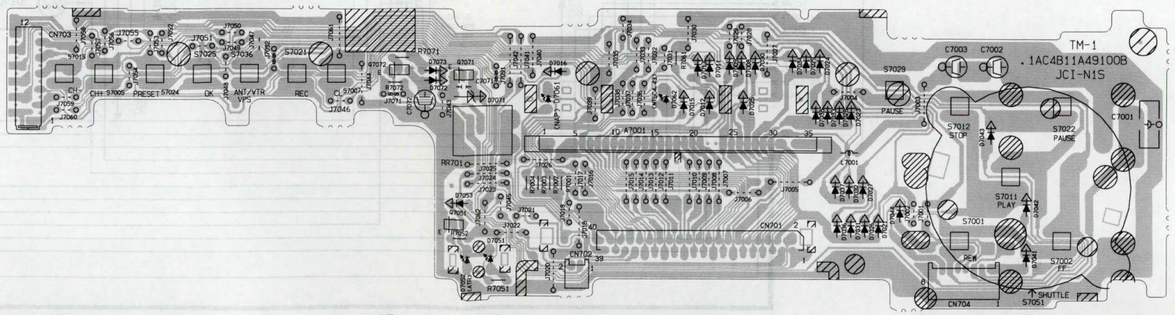

Published in Heiloo, Holland.

www.freeservicemanuals.info
11/15/15
Digitized by WWW.FREESERVICEMANUALS.INFO

IF CIRCUIT DIAGRAM

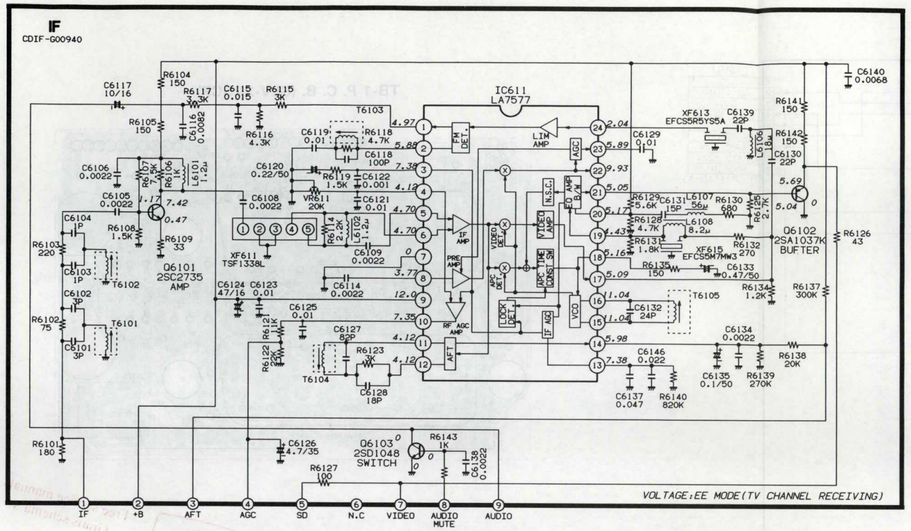

IF P. C. B.

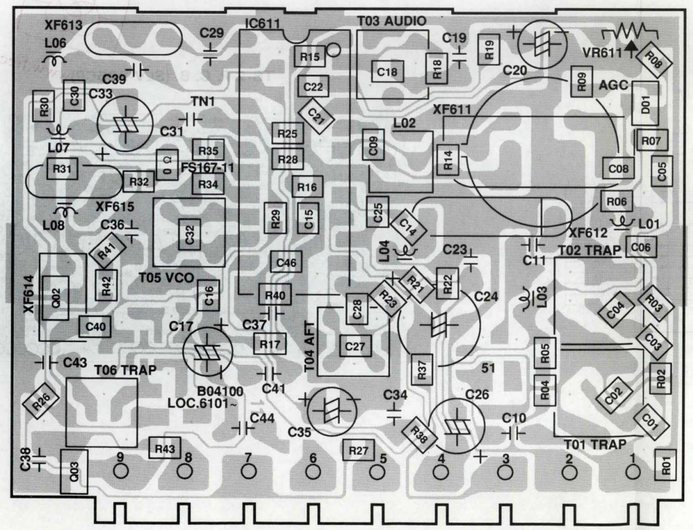

NOTE: Either one of these RF converters, type CDRF-G00010 or CDRF-G00740 is used, depending on availability.

RF CONVERTER CIRCUIT DIAGRAM

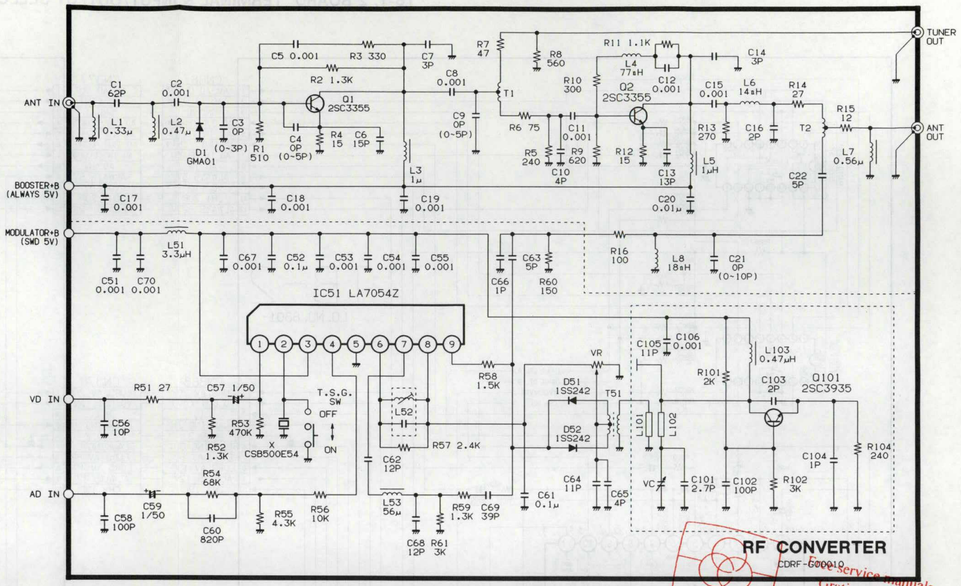

RF CONVERTER CIRCUIT DIAGRAM

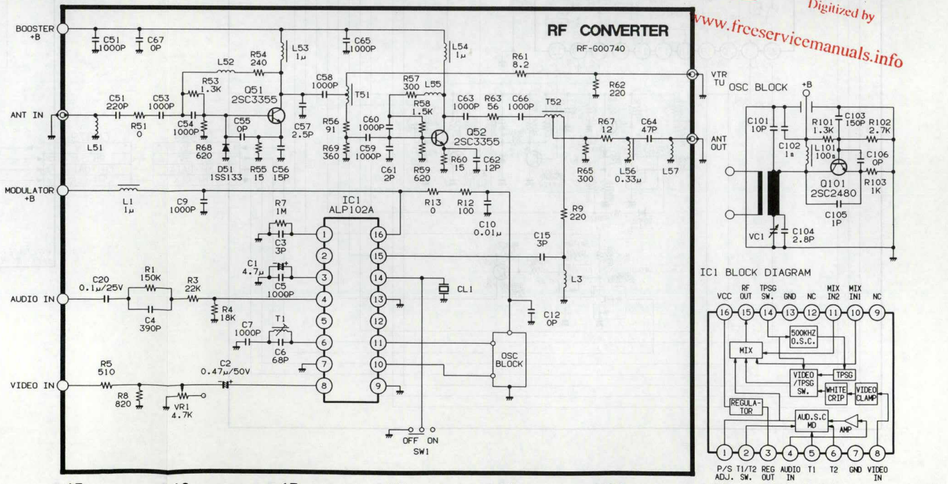

Free service manuals
Gratis schema's
Digitized by
www.freeservicemanuals.info

Published in Heiloo, Holland.

www.freeservicemanuals.info

Digitized by WWW.FREESERVICEMANUALS.INFO

TB-1, 2 BOARD TERMINAL & INPUT/OUTPUT SELECTION CIRCUIT DIAGRAM (SLV-225CP)

TB-2
LO. NO. 8801-

TB-1
LO. NO. 8501-

EURO AV
(BLACK)

CH+
(BLUE)

A5-13591/BP2N-5PSY

TB-1 P. C. B. (SLV-225CP)

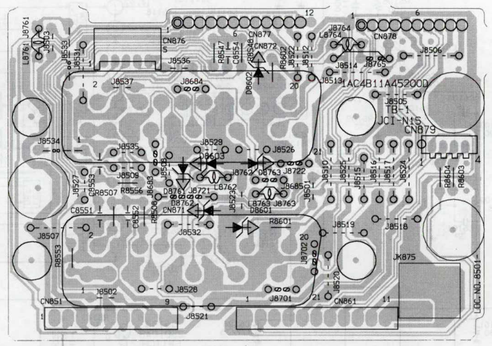

TB-2 P. C. B. (SLV-225CP)

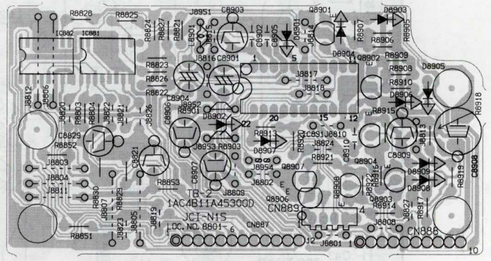

Free service manuals
Gratis schema's
Digitized by
www.freeservicemanuals.info

Published in Heiloo, Holland.

www.freeservicemanuals.info

Digitized by WWW.FREESERVICEMANUALS.INFO

TM-8 BOARD VPS CIRCUIT DIAGRAM (SLV-225VP ONLY)

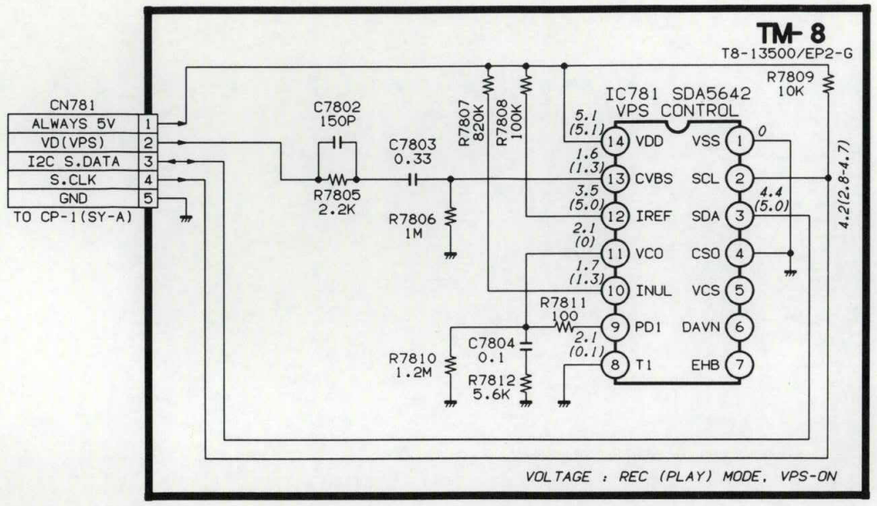

TM-8 P. C. B. (SLV-225VP ONLY)

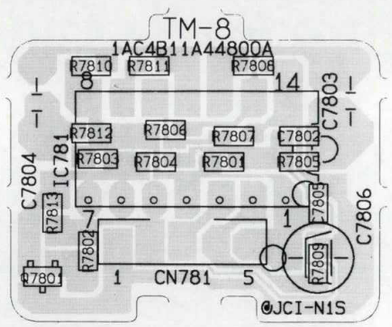

SEMICONDUCTOR LEAD LAYOUTS

BA7025L

LA7221

LA7295

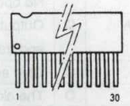

LB1641

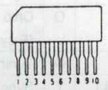

MN1380-L

STK5446

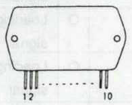

DTA114ES
DTA144ES
DTC114ES
DTC124ES
DTC144ES
2SC2668

2SA937-Q

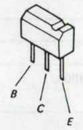

2SA1175-HFE
2SC2785-HFE

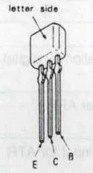

2SA1428-Y
2SC3668-Y

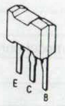

2SD734-E
2SD1468S-S

2SB984-K

EM-1Z
FDH300
1SS83
10E2

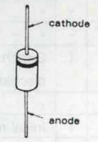

MTZJ-7.5B
RB441Q
RD12ES-B2
RD15ES-B2
RD18ES-B2
RD24ES-B3
RD33ES-B2
RD5.6ES-B2
RD6.2ES-B2
RD8.2ES-B2
RD9.1ES-B2
1SS119

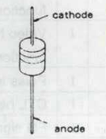

SEL2410E-D

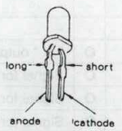

MPG3868S-J85K-E

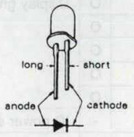

Published in Heiloo, Holland.

www.freeservicemanuals.info

Digitized by WWW.FREESERVICEMANUALS.INFO

IC301 SYSTEM CONTROL/TIMER/TUNING CONTROL MPU PIN FUNCTIONS TABLE

No.	Name	I/O	I/O Signal Function
1	S - PLAY	O	Signal for indicating CUE , REV , STILL and SLOW modes.
2	4k - PWM	O	Output 4kHz PWM signal for set period at start of high-speed FF / REW. (For 2 Haed model)
	CAP P.	O	Gain down control for Head Motor Amplifier at SLOW mode. (For 4 Head model)
3	DRUM UP	O	Head drum motor rotation speed - up signal.
4	SS + DRUM SHIFT	O	Signal for indicating SLOW/STILL modes and alternation of drum motor control data. (3 value voltage)
5	MC - BR	O	Brake signal for capstan motor.
6	C - Vs CUT	O	Cut off for capstan motor control voltage when SLOW / STILL modes.
7	0 / 1 DATA	I	CTL pulse duty detection signal input. Used for VISS detection.
8	-	-	-
9	-	-	-
10	FL- START SW	I	Switch input indicating start of cassette loading or discharge by cassette mechanism.
11	-	-	-
12	RESET	I	Initial reset terminal for this IC.
13	XT1	-	Clock OSC for when power failure condition.
14	XT2	-	Frequency is 32.672kHz.
15	VSS	-	Ground terminal
16	CF1	-	IC clock OSC terminal.
17	CF2	-	Frequency is 13.92MHz.
18	VDD	-	IC power supply terminal.(5Vdc)
19	T. END S.	I	Sensor signal input for tape end detection.
20	T. TOP S.	I	Sensor signal input for tape beginning detection.
21	-	-	-
22	POWER DOWN	I	Power failure detection terminal.
23	TAPE SPEED	I	Input of result of tape speed discrimination by digital servo IC.
24	AFT- C	I	Tuner AFT s-curve signal input for tuner AFT function.
25	ENV.	I	Video head envelope detection signal input for ATR function.
26	T. REEL P.	I	Pulse input for detection of take-up reel table rotation.
27	CTL P.	I	CTL head recording / playback pulse signal input.
28	C - FG P.	I	FG signal input of capstan motor.
29	RF SW P.	I	Input of RF switching pulse created by head drum PG.
30	REMOCON	I	Remote control signal input.
31	AFT MUTE	O	"H" output during TU AFT mute. (V-syn model only)
32	-	-	-
33	-	-	-
34	NTSC 4.43	O	" H " output during NTSC 4.43 playback mode.
35	PAL LED	O	Signal for PAL indicator LED drive.
36	NTSC 4.43 LED	O	Signal for NTSC4.43 indicator LED drive.
37	NAP LED	O	Signal for NAP indicator LED drive.
38	G9	O	Display grid outputs (FLD).
39	G8	O	
40	G7	O	
41	G6	O	
42	G5	O	
43	G4	O	
44	G3	O	
45	G2	O	
46	G1	O	
47	VDD	-	IC power supply input.(5Vdc)
48	V LOAD	O	-30V input for FLD drive.
49	SEG p	O	Display segment outputs (FLD). (Included key-scan output)
50	SEG o	O	
51	SEG n	O	
52	SEG m	O	
53	SEG l	O	
54	SEG k	O	
55	SEG j	O	
56	SEG i	O	
57	SEG h	O	
58	SEG g	O	
59	SEG f	O	
60	SEG e	O	
61	SEG d	O	
62	SEG c	O	
63	SEG b	O	
64	SEG a	O	
65	KEY IN 0	I	Operation key data inputs.
66	KEY IN 1	I	
67	KEY IN 2	I	
68	KEY IN 3	I	
69	SW DATA 0	I	3-bit data indicating operation position of mechanism.
70	SW DATA 1	I	
71	SW DATA 2	I	
72	SAFETY SW	I	Input terminal for accidental erasur prevention switch. No operation to recording mode while "LOW" is input.
73	SV S. DATA	O	Output 8-bit X 4 serial data giving operation mode and tracking data,etc., to digital servo IC.
74	OSD CS	O	Chip enable (access) signsl output to OSD IC.
75	SV S CLK	O	The clock pulse for digital servo IC.
76	COMMON DATA	I/O	Terminal for communication of respective data with OSD IC , tuning PLL IC and CH+ control IC.
77	I2C SDA	I/O	Data exchange with the VPS decoder IC.
78	COMMON CLK	O	The clock pulse for OSD IC , PLL IC and VPS IC.
79	ATR LED	O	Signal for ATR indicator LED drive.
80	PLL CS	O	Chip enable signal output to PLL tuning system IC. (F-syn model)
	PWM	O	Tuning voltage output (PWM signal). (V-syn model)
81	H SYNC (LEVEL)	I	Sync. detecton signal input for existing channel discrimination.
82	50 / 60	O	" LOW " output during NAP or NTSC4.43 of playback modes. (60 field mode)
83	BAND 1	O	Tuning band data output(BAND1,BAND2). (L,L)=VHF-LOW (L,H)=VHF-HIGH (H,L)=UHF (H,H)=SKIP. (V-syn model only)
84	BAND 2	O	
85	CH PLUS CLK	O	The clock pulse for CH+ input/output selection IC.
86	-	-	-
87	-	-	-
88	INPUT SEL.	O	Signal for selecting video/audio input signal.
89	VSS	-	IC ground terminal.
90	VDD	-	IC power supply input.(5Vdc)
91	ML- F	O	Loading motor rotation direction (FWD) indication signal.
92	ML- R	O	Loading motor rotation direction (REV) indication signal.
93	ML- L	O	Loading motor rotation speed (low speed) indication signal.
94	ML- M	O	Loading motor rotation speed (medium speed) indication signal.
95	REC H	O	Signal for indicating recording mode.
96	PB H	O	Signal for indicating playback mode.
97	TU A MUTE + A MUTE	O	"H" output during TU audio mute and signal disable audio signal output mute.
98	V MUTE + OFF MUTE	O	"H" output during TU video mute and video mute during power off.
99	AV CTL or ANT/ VTR	O	AV terminal (pin8 of 21pin AV socket) control signal or ANT / VTR selection signal output.
100	POWER UP	O	"HIGH" output except when power is off. Indicating that power is ON.

BP2VF_OS

Published in Heiloo, Holland.

www.freeservicemanuals.info 11/15/15

Digitized by WWW.FREESERVICEMANUALS.INFO

SECTION 5
MECHANISM SERVICE TECHNICAL INFORMATIONS

1. OUTLINE OF P92 MECHANISM

P92 mechanism is used for video tape recorders shipped as new product of 1992.
The P92 mechanism has the same basic structures as the P90 mechanism shipped in 1990 except below contents. As this manual omits the description of the same contents with P90, please refer to the P90 Mechanism Service Technical Information.

Note: (8) to (10) of the followings have been already changed in "P91 mechanism" and repeated in "SUPPLEMENT of P91 mechanism".

(1) The five components of the reel drive system, supply reel table, take up reel table, reel gear (S), reel gear (T) and COMPL idler clutch, are replaced with those of new one to prevent picture-shifting in the R-search.

As shown in the figure 1-a and 1-b, there are two types of the supply reel table and take up reel table used for the model produced in 1992. One is an old reel table with a cap and fin in the figure 1-a, and the other is a new reel table of monolithic construction without a cap in the figure 1-b.
The colour of the new supply reel table and take up reel table are different from the old ones for identification. The colours of the new and old reel tables are described in the table 1 below.

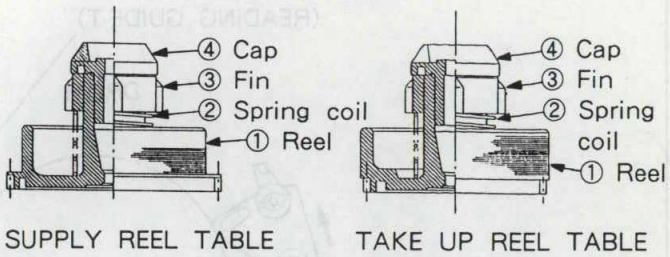

Fig. 1-a Old

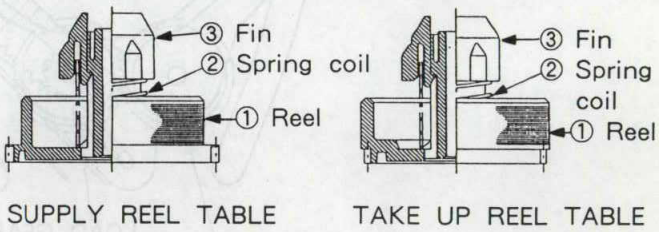

Fig. 1-b New

Free service manuals
Gratis schema's
Digitized by
www.freeservicemanuals.info

Note: Five parts of the reel driving system are the supply reel table, take up reel table, reel gear (S), reel gear (T) and COMPL idler clutch.

Mechanism		Supply Reel Table			Take up Reel Table			Remarks
		①	③	④	①	③	④	
A	Old reel of P92 mechanism	Light Blue	Black	White	Light Blue	White	White	A is interchangeable with B and C, if changing the entire 5 components of the reel drive system. In other cases, it has no interchangeability.
	New reel of P92 mechanism	White	Light Blue	–	White	Green	–	
B	Old reel of P88, P89, P90 and P91 mechanism	White	White	White	White	White	White	B cannot be used for A and B.
	New reel of P88, P89, P90 and P91 mechanism	White	Black	–	White	White	–	
C	Old reel of P90 S-VHS mechanism	Gray	Black	White	Gray	White	White	C is interchangeable with A, if changing the entire 5 components of the reel drive system. In other cases, it has no interchangeability.

Refer to the figure 1-a and 1-b for No.①,③ and ④.
The old and new are discriminated by the colour of ① reel, ③ fin and ④ cap.

Table 1

Published in Heiloo, Holland.

www.freeservicemanuals.info 11/15/15

Digitized by WWW.FREESERVICEMANUALS.INFO

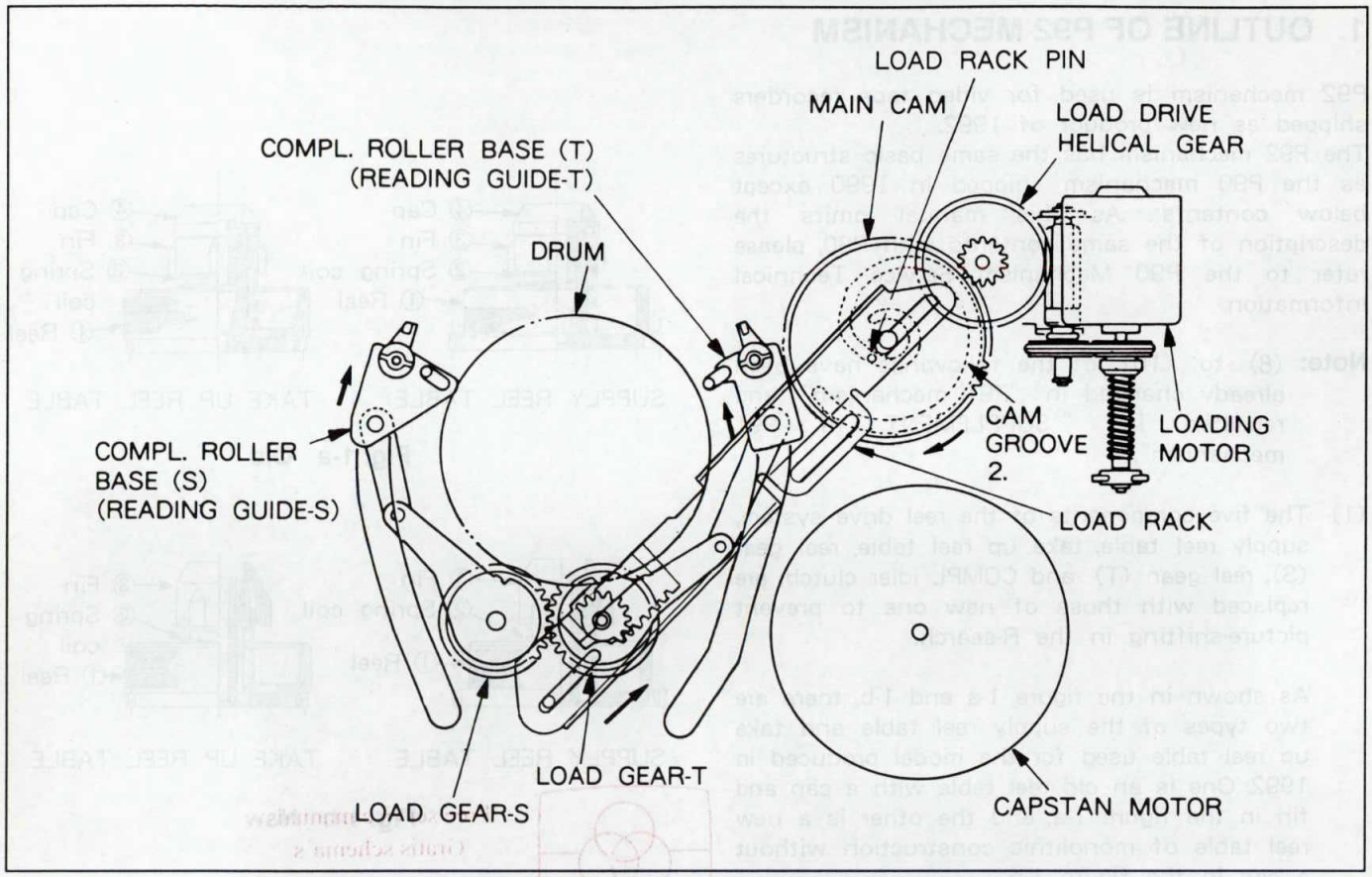

Fig. 2-1 CONSTRUCTION OF TAPE LOADING MECHANISM

(2) The main cam gear, load rack COMPL and load (T) are replaced with new ones to more simplify the tape loading mechanism. Therefore, the load cam lever of the old mechanism is not required. The new tape loading mechanism is shown in the figure 2-1.

(3) In compact size model (width : 360mm), the MC-2 and MC-3 boards between the loading motor and system control circuit are replaced with new ones. Therefore, a relay board (VHJ-0089) is required for using the service tool mode selector (VHJ-0050). The new MC-2 board has the connectors of CN817 (6 Pin type) and CN818 (2 Pin type) at the both sides of the CN811, and is marked "92" with large letters. The MC-2 board is mounted with one mechanical screw. As for the mid mount model, the same relay board (VHJ-0075) as P90 mechanism is used.

(4) The pulley bracket is disused and the special screw is employed. [However, the pulley bracket is used to S VHS mechanism (High speed FF/REW mechanism)]

(5) The shape of the clutch lever assembly is partially changed and the damper is disused.

(6) The shape of the front helical gear of the loading motor is partially changed and the washer is disused.

(7) The 4 screws for mounting the gear bracket assembly of the COMPL cassette mechanism are changed to 3 screws.

(8) The height adjustment of the exit side fixed guide is unnecessary by improvement in precision of the tape running system.

(9) The form of MC-1 and MC-4 board connector (CN801) near the reel drive part are changed.

(10) Auto head cleaner mechanism is used for cleaning video head automatically when loading and unloading.

Service Jigs No.
Mode selector (VHJ-0050): J-6082-050-A
Mode selector relay board (VHJ-0075): J-6090-008-A
Mode selector relay board (VHJ-0089): J-

Published in Heiloo, Holland.

www.freeservicemanuals.info 11/15/15

Digitized by WWW.FREESERVICEMANUALS.INFO

2. DESCRIPTION OF MECHANISM OPERATION

2-1. BASIC OPERATION MODE OF MECHANISM

The P-90 mechanism has its original modes such as given in Table 2-1, in addition to the VTR is operation modes (STOP, FF, REW, PLAY, REC, R-SEARCH, F-SEARCH, STILL, SLOW, and ETS). These modes specific to the mechanism play important roles in tape protection operation at the time of a shift to various modes of the VTR above. A shift to the mode specific to the mechanism is carried out by controlling the rotation of the loading motor with the control signal of the system control circuit. The detection of important mechanism operation mode positions is done by using the FL START SWITCH for detecting the cassette ejection / insertion, and the MECHANISM MODE SWITCH for detecting each mode of the mechanism (3 bit MODE DATA is output by operating the rotary switch).

Mechanism Mode	Mechanism Mode Switch 3	2	1	HEX DATA	Function	Main Mode Shifting Conditions	VTR Operation Mode
EJECT	–	–	–		Eject position	Detected by FL start switch	EJECT
					Front loading/Unloading	← Cassette insertion through STOP or PLAY mode STOP from EJECT →	
SHORT REW	1	1	0		Take up operation in the tape end position	← Pre-rolling after detecting tape end with tape end sensor.	Low side of ⑥. Sensed upon IN
INITIAL	1	1	1	⑦	Power off position	Power ON↔OFF when the cassette is inserted completely. OFF	Power off when tape is loaded completely
					Tape unloading position Tape loading Tape loading ending position	From PLAY to STOP From FF/REW to STOP	
BRAKE	0	0	1	①	Main brake applying position		
STOP / FF/REW	0	1	0	②	STOP waiting and FF/REW (the head motor rotation)	ON	STOP, FF/REW
STILL	0	1	1	③	The positions of STILL, SLOW or F-ADV.	From SLOW to STOP (or STILL) From FF to F-SEARCH From F-SEARCH to FF PLAY↔STILL	STILL, SLOW, F-ADV
PLAY	1	0	0	④	From FWD direction Normal running mode		PLAY, REC, F-SEARCH
IDLER	1	0	1	⑤	Forward/reverse changeover position	PLAY↔R-SEARCH From REW to R-SEARCH From R-SEARCH to REW	PAUSE
REV	1	1	0	⑥	From REV direction Normal running mode		R-SEARCH

Table 2-1

Published in Heiloo, Holland.

www.freeservicemanuals.info 11/15/15

Digitized by WWW.FREESERVICEMANUALS.INFO

2-2. DESCRIPTION OF MECHANISM DRIVE

To realize the thin type mechanism, a loading motor and two pieces of cam (MAIN CAM GEAR and the MODE CAM GEAR) to be driven by the said motor are mounted on the upper part of the capstan motor, that was a dead space in the conventional mechanisms hitherto available, with a view to optimization of parts mounting layout. (Fig. 2-1 and Fig. 2-2.)

- IMPEDANCE ROLLER and FE HEAD are not used to the exclusive model for playback.
- The shaded sections are different from P90 mechanism.

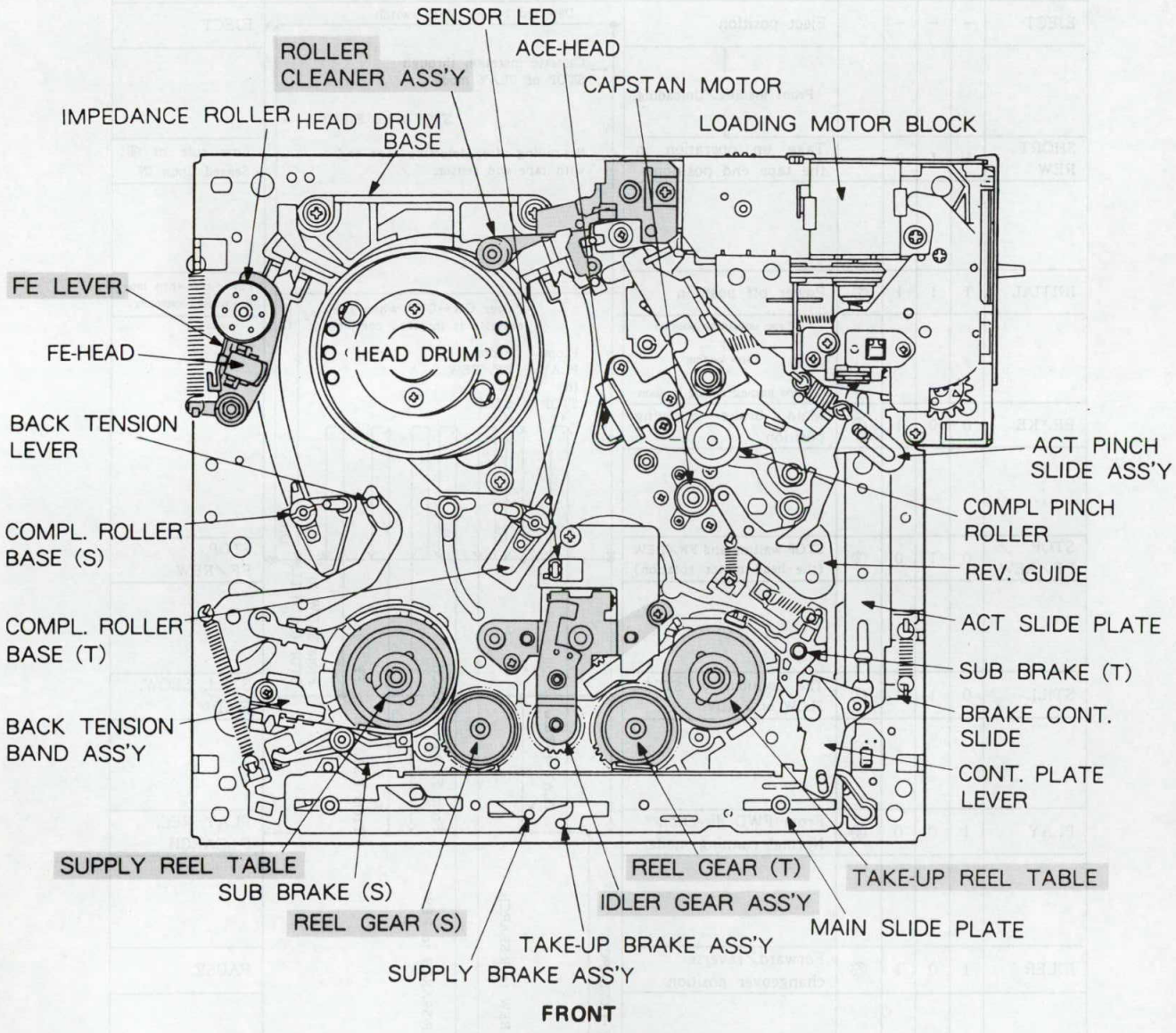

Fig. 2-1. Top View of Mechanism (Initial mode)

Published in Heiloo, Holland.

www.freeservicemanuals.info 11/15/15

Digitized by WWW.FREESERVICEMANUALS.INFO

- Some models have no Capstan Soft Brake.
- SAFTY SWITCH is not used to the exclusive model for playback.
- The shaded sections are different from P90 mechanism.

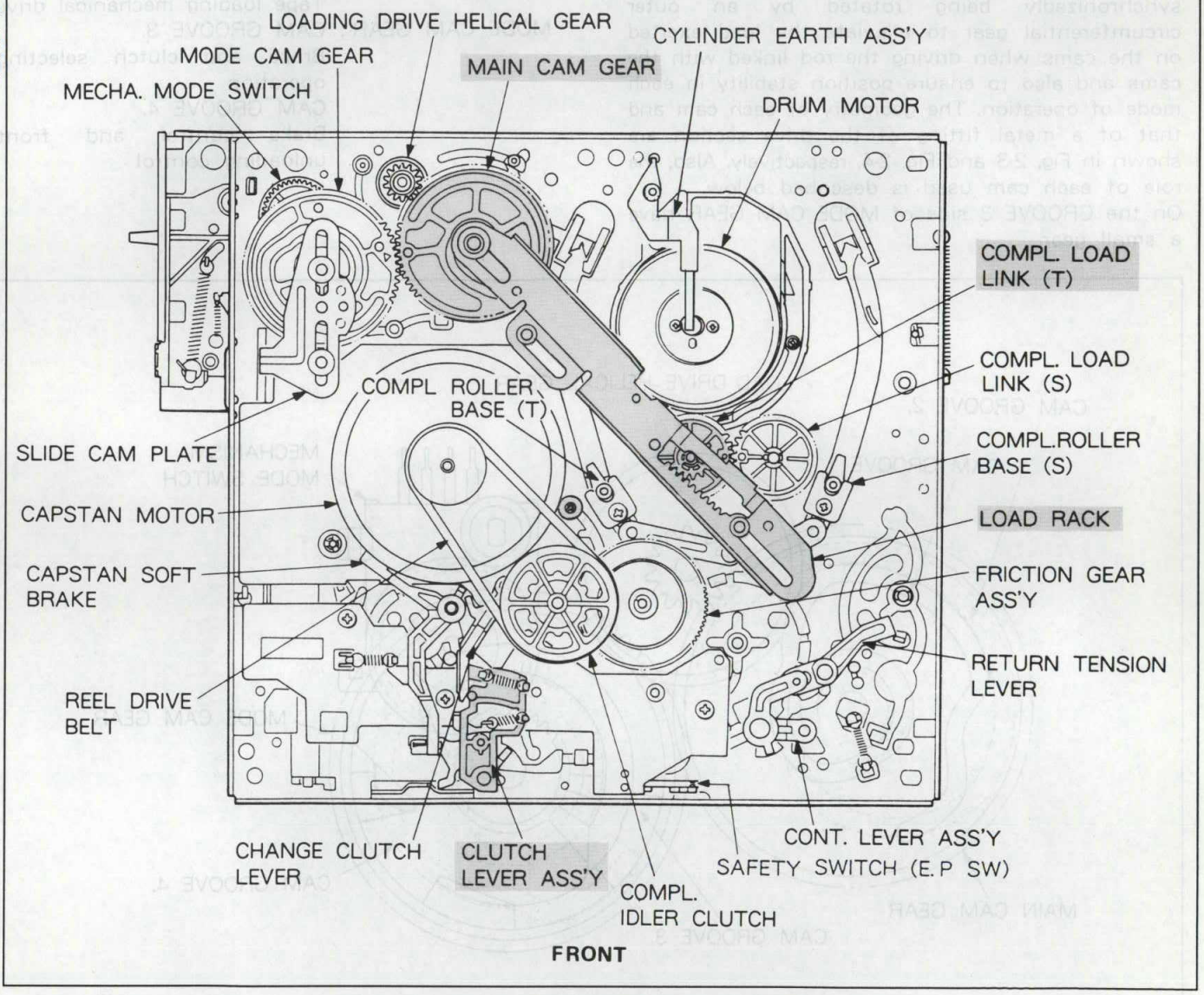

Fig. 2-2. Bottom View of Mechanism (Initial mode)

Published in Heiloo, Holland.

www.freeservicemanuals.info 11/15/15

Digitized by WWW.FREESERVICEMANUALS.INFO

These two cams have one CAM GROOVE on both sides. A total of four CAM GROOVEs performs independent functions to meet the multi-function needs of these days by driving the elements of a wide variety of functions with the motor precisely controlled by a microcomputer.

The two cams are positive motion cams having a groove over 570 degrees. These cams cause the amount of lift to be changed by a mild gradient according to the angle of rotation while synchronizedly being rotated by an outer circumferential gear to alleviate the load exerted on the cams when driving the rod linked with the cams and also to ensure position stability in each mode of operation. The geometry of each cam and that of a metal fitting of the drive section are shown in Fig. 2-3 and Fig. 2-4, respectively. Also, the role of each cam used is described below.

On the GROOVE 3 side of MODE CAM GEAR have a small gear.

This small gear is engaged with the MECHANISM MODE SWITCH as shown in Fig. 2-3., and detect the mechanism operation mode. In this way, the two cams and the MECHANISM MODE SWITCH are rotated synchronously, and the mechanism is fully synchronized and driven for each mode.

MAIN CAM GEAR : CAM GROOVE 1.
Pinch roller pressing operation
CAM GROOVE 2.
Tape loading mechanical drive

MODE CAM GEAR : CAM GROOVE 3.
Brake and clutch selecting operation
CAM GROOVE 4.
Brake control and front unloading control

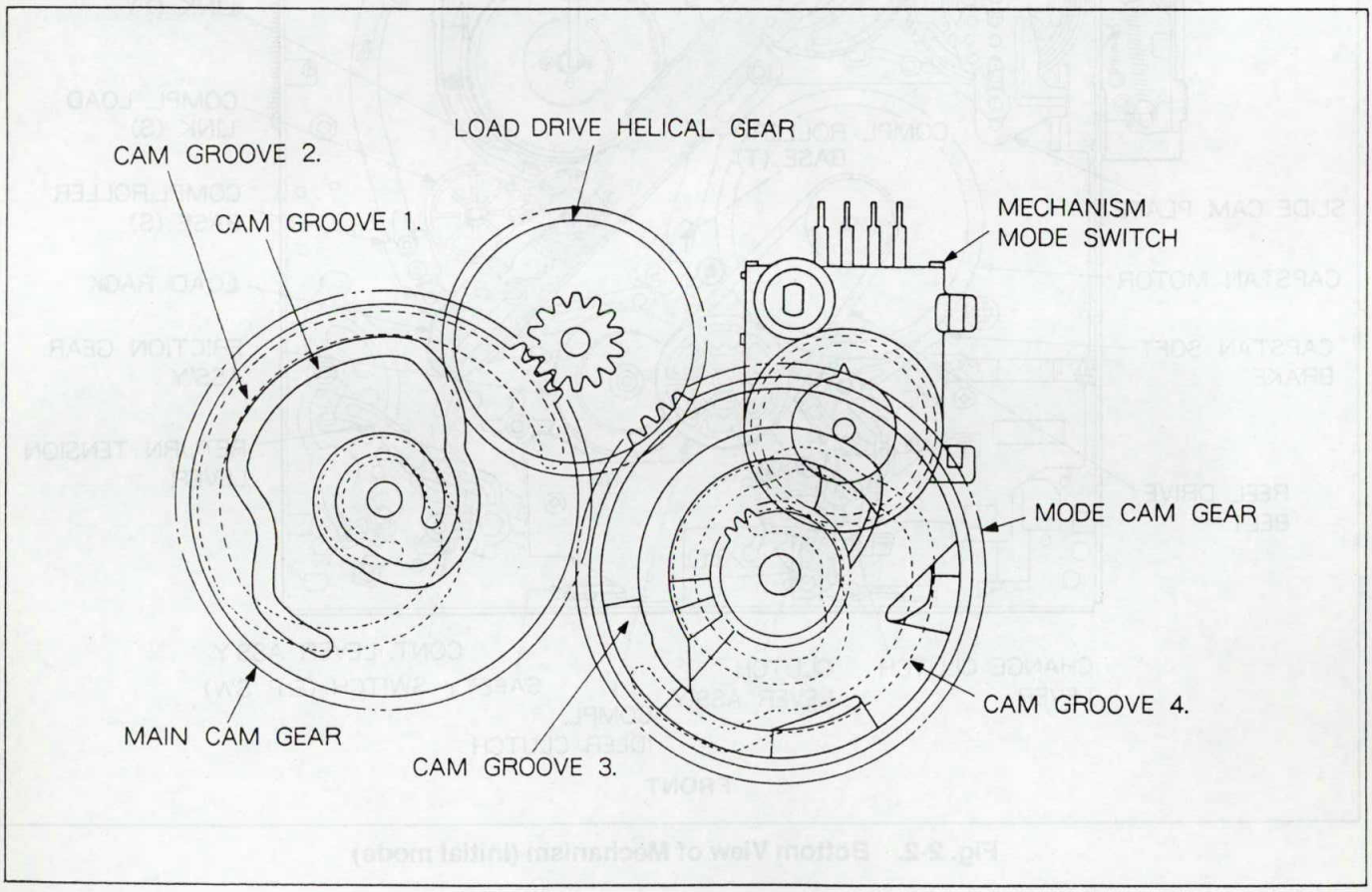

Fig. 2-3 PLAN OF CAMS CONSTRUCTION

Published in Heiloo, Holland.

www.freeservicemanuals.info 11/15/15

Digitized by WWW.FREESERVICEMANUALS.INFO

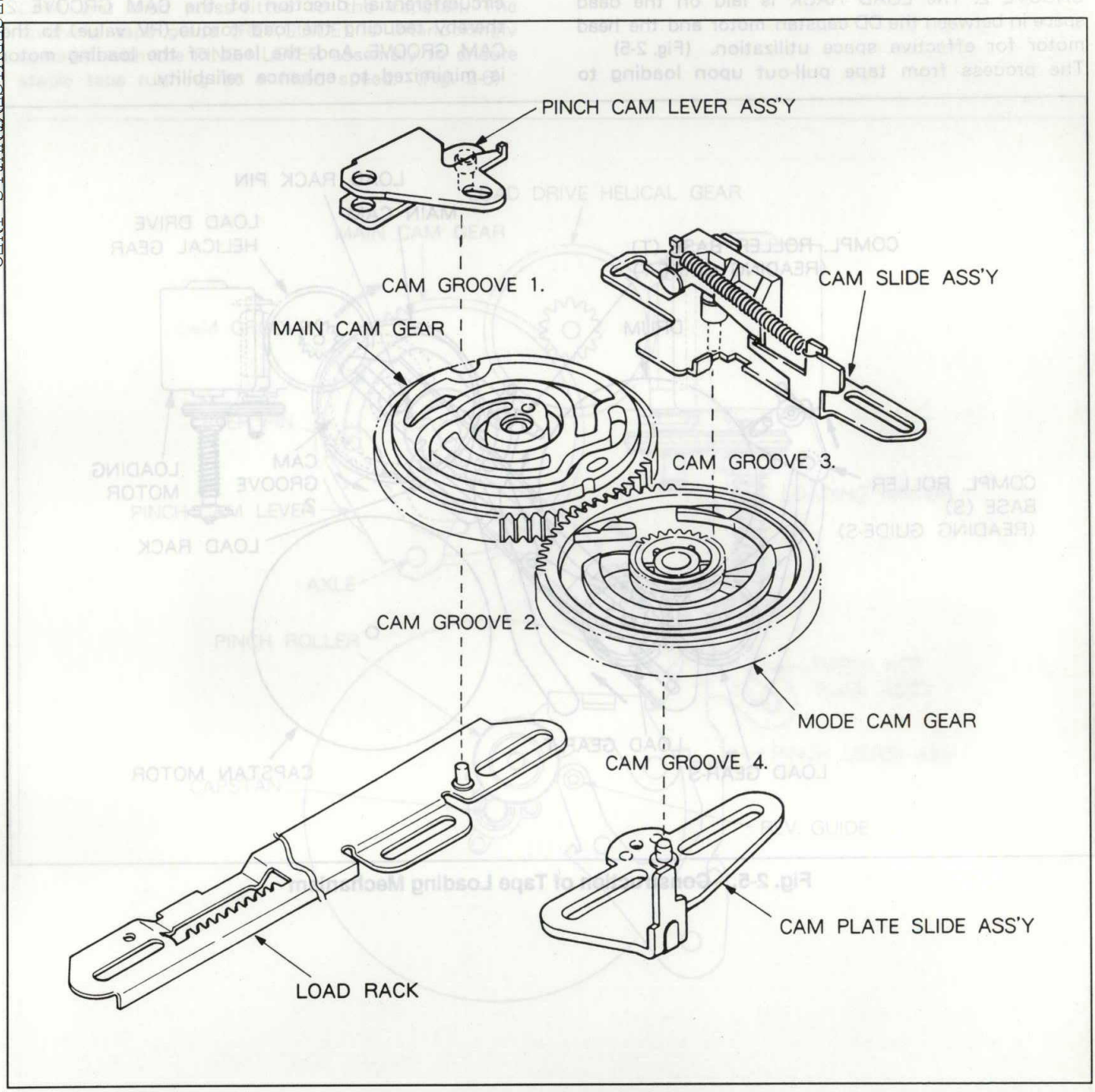

Fig. 2-4. View of Cams Construction

Published in Heiloo, Holland.

www.freeservicemanuals.info 11/15/15

Digitized by WWW.FREESERVICEMANUALS.INFO

2-2-3. Operation of Brake Control Plate

The ACT SLIDE PLATE and the MAIN SLIDE PLATE shown in Fig. 2-7 is driven by the CAM GROOVE 4 of the MODE CAM GEAR for precise control of operations including the control of back tension lever, auxiliary brake (SUB BRAKE S/T), main brake (SUPPLY BRAKE and TAKE-UP BRAKE), clutch selection, and drive selection of front loading mechanism.

Also, the mechanism mode switch is engaged with the small gear of the MODE CAM GEAR for sync rotation. At the time, the detection position of each mode is set so that it becomes the flat section at the cam curve of the CAM GROOVE 4 of the MODE CAM GEAR. So, even if motor stop time deviation occurs due to the load following the detection of the loading motor stop position, the control plate linked with a stop in the specified position.

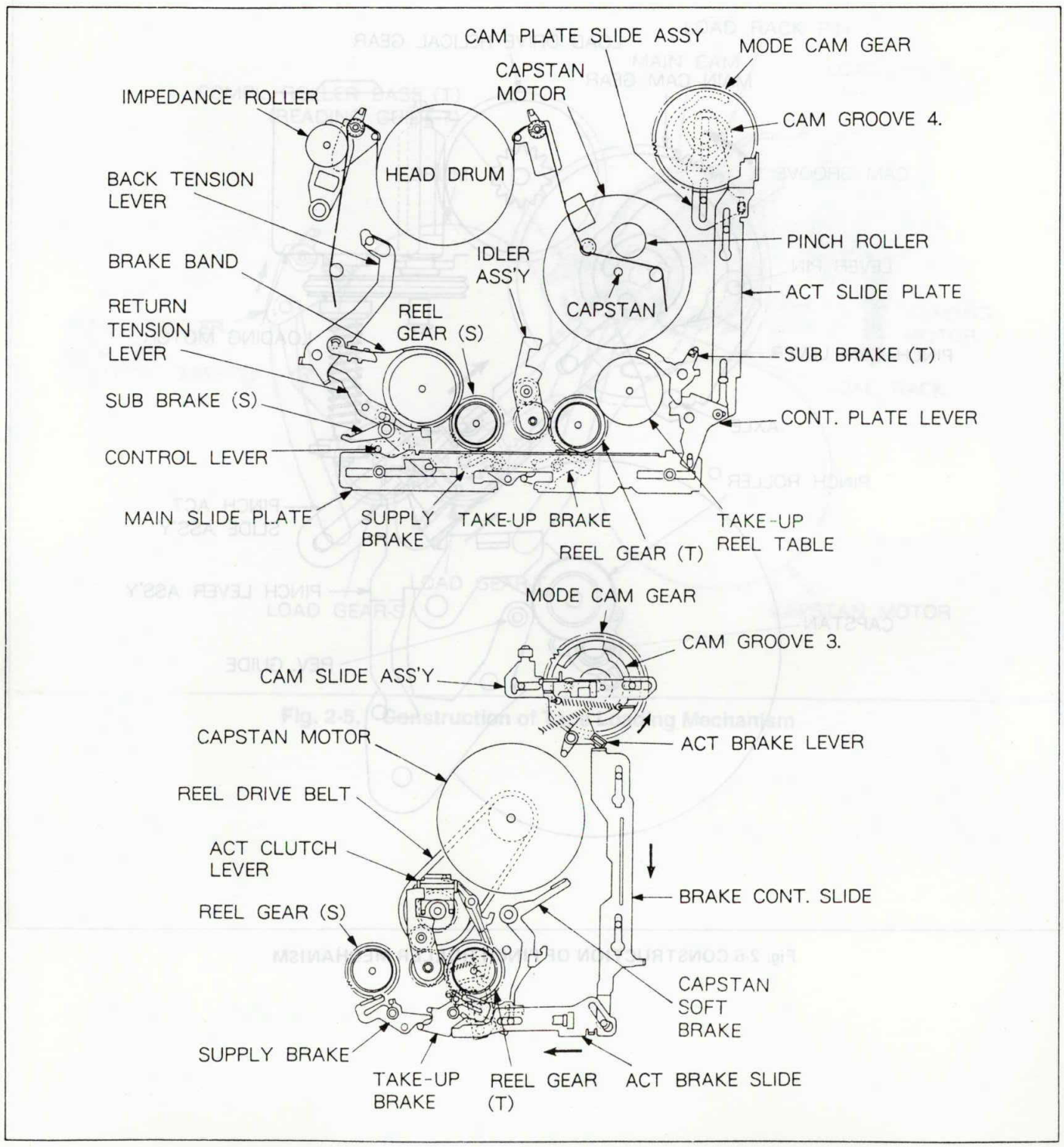

Fig. 2-7 CONSTRUCTION OF BRAKE CONTROL PLATE (AT REW/FF, STOP MODE)

Published in Heiloo, Holland.

www.freeservicemanuals.info 11/15/15

Digitized by WWW.FREESERVICEMANUALS.INFO

2-2-4. Brake Control Mechanism

The mechanical logic of the brake state is shown in Fig. 2-8. The brake which damps the reel rotation is operated by the BRAKE CONTROL SLIDE driven from the CAM GROOVE 3 of the MODE CAM GEAR.

Also, to alleviate damage to the tape caused by high tension of the brake in operation, the tape is stopped after brake operation and the shape is thoughtfully designed for proper biting-in ratio of the left and the right brakes after-mentioned to each other.

This enables the supply brake to be released by the operation of the above-mentioned MAIN SLIDE PLATE after an elapse of prefixed slight time to reduce the tape tension to zero, and to provide the tape with a proper degree of looseness. As a result, a slight gap is created in the tape from the HEAD DRUM.

Further, a momentary still mechanism which dispenses with use of a plunger solenoid is not provided as one of design features of the P-90 mechanism.

To stabilize the image in an extremely short period of time during a shift to the STILL mode from the PLAY mode, the auxiliary brake (CAPSTAN SOFT BRAKE) is press-fit to the outer circumference of the capstan motor by the before-mentioned CAM GROOVE 3 of the MODE CAM GEAR.

These operations is interlocked with the operation of the before-mentioned ACT SLIDE PLATE and the MAIN SLIDE PLATE. It consists of one MODE CAM for offsetting the operating position.

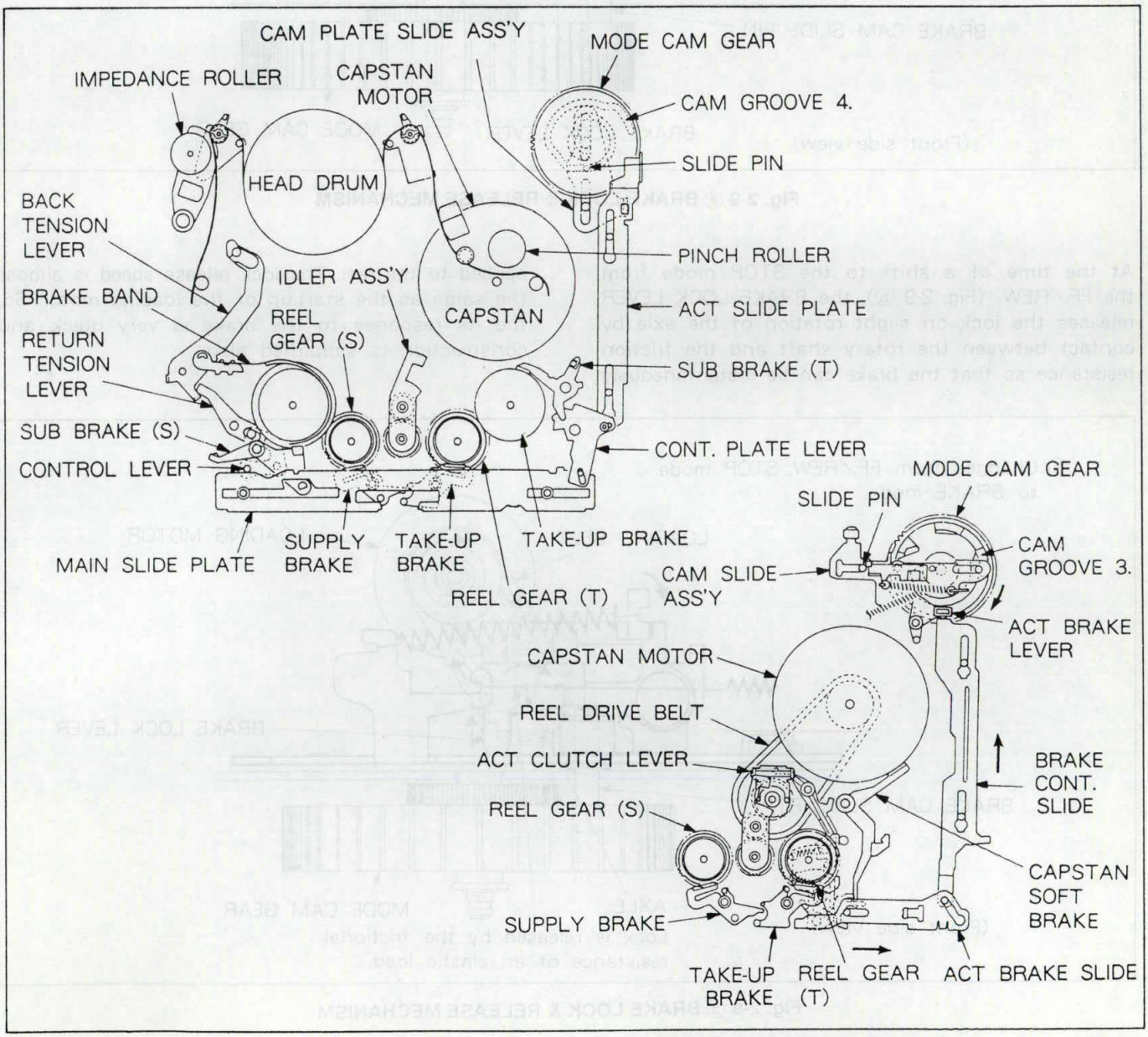

Fig. 2-8 CONSTRUCTION OF BRAKE CONTROL PLATE (AT BRAKE MODE)

Published in Heiloo, Holland.

www.freeservicemanuals.info 11/15/15

Digitized by WWW.FREESERVICEMANUALS.INFO

2-2-5. Brake Lock Release Mechanism (FF/REW→STOP Mode)

The brake lock momentary release mechanism is shown in Fig. 2-9 ⓐ, ⓑ and Fig. 2-10.
In the FF/REW mode (Fig. 2-9 ⓐ) mechanical elastic load is given to the BRAKE LOCK LEVER mounted on the BRAKE CAM SLIDE which causes the brake to operate, and it is locked to the high-speed rotary axle of the 1st reducing section of the loading motor.

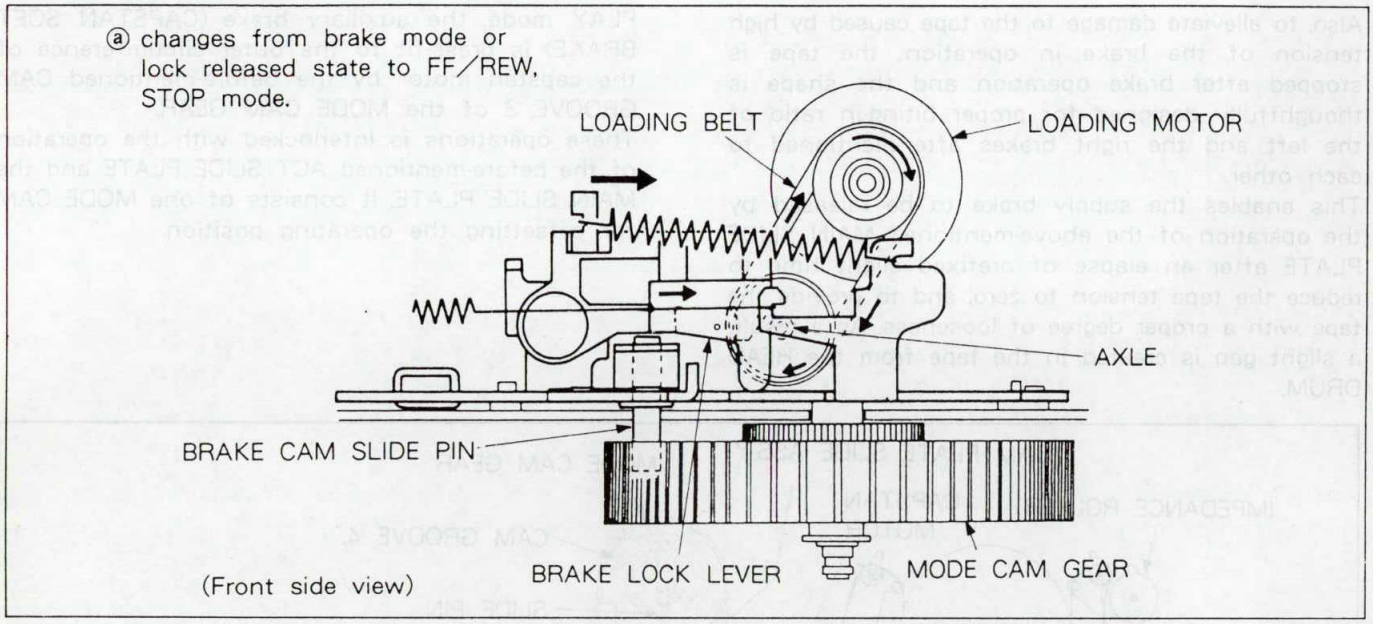

Fig. 2-9 ⓐ BRAKE LOCK & RELEASE MECHANISM

At the time of a shift to the STOP mode from the FF/REW (Fig. 2-9 ⓑ), the BRAKE LOCK LEVER releases the lock on slight rotation of the axle by contact between the rotary shaft and the friction resistance so that the brake can be instantaneously applied to the reel. The lock release speed is almost the same as the start-up of the loading motor. So, the its response to the brake is very quick, and construction is simplified also.

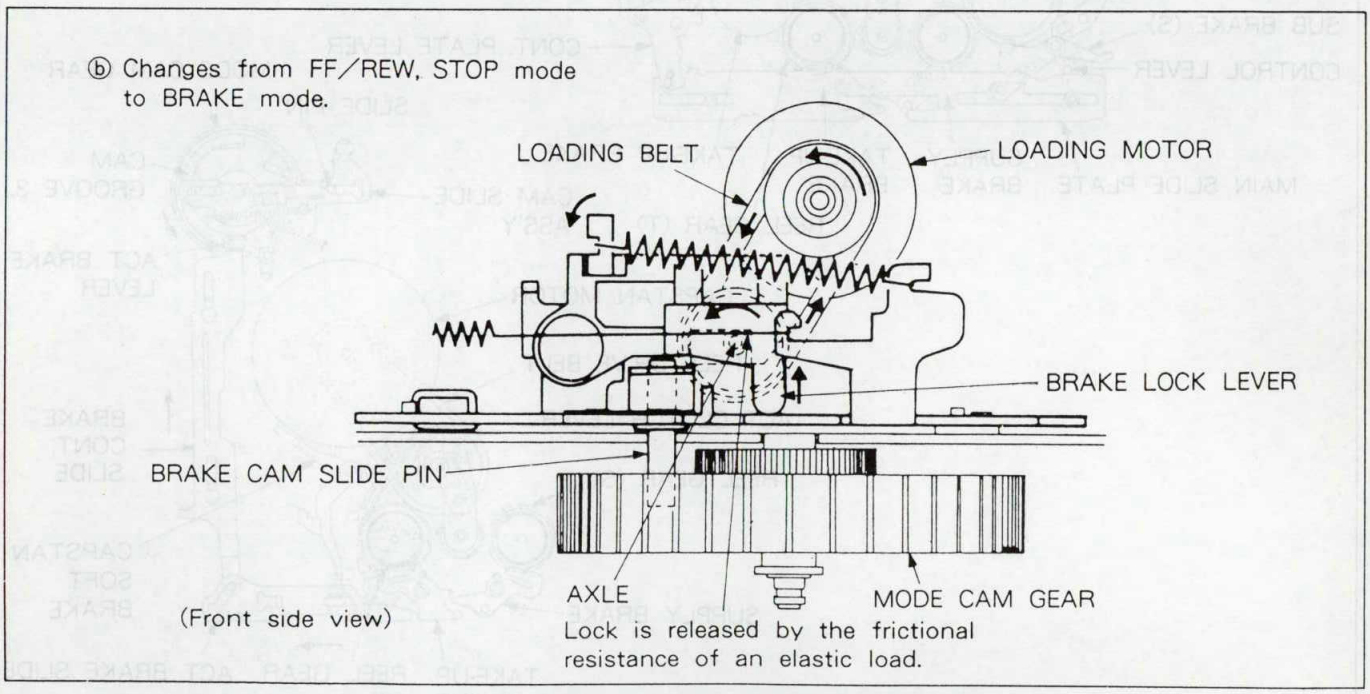
ⓑ Changes from FF/REW, STOP mode to BRAKE mode.
LOADING BELT
LOADING MOTOR
BRAKE LOCK LEVER
BRAKE CAM SLIDE PIN
AXLE
MODE CAM GEAR
(Front side view)
Lock is released by the frictional resistance of an elastic load.

Fig. 2-9 ⓑ BRAKE LOCK & RELEASE MECHANISM

Published in Heiloo, Holland.

www.freeservicemanuals.info 11/15/15

Digitized by WWW.FREESERVICEMANUALS.INFO

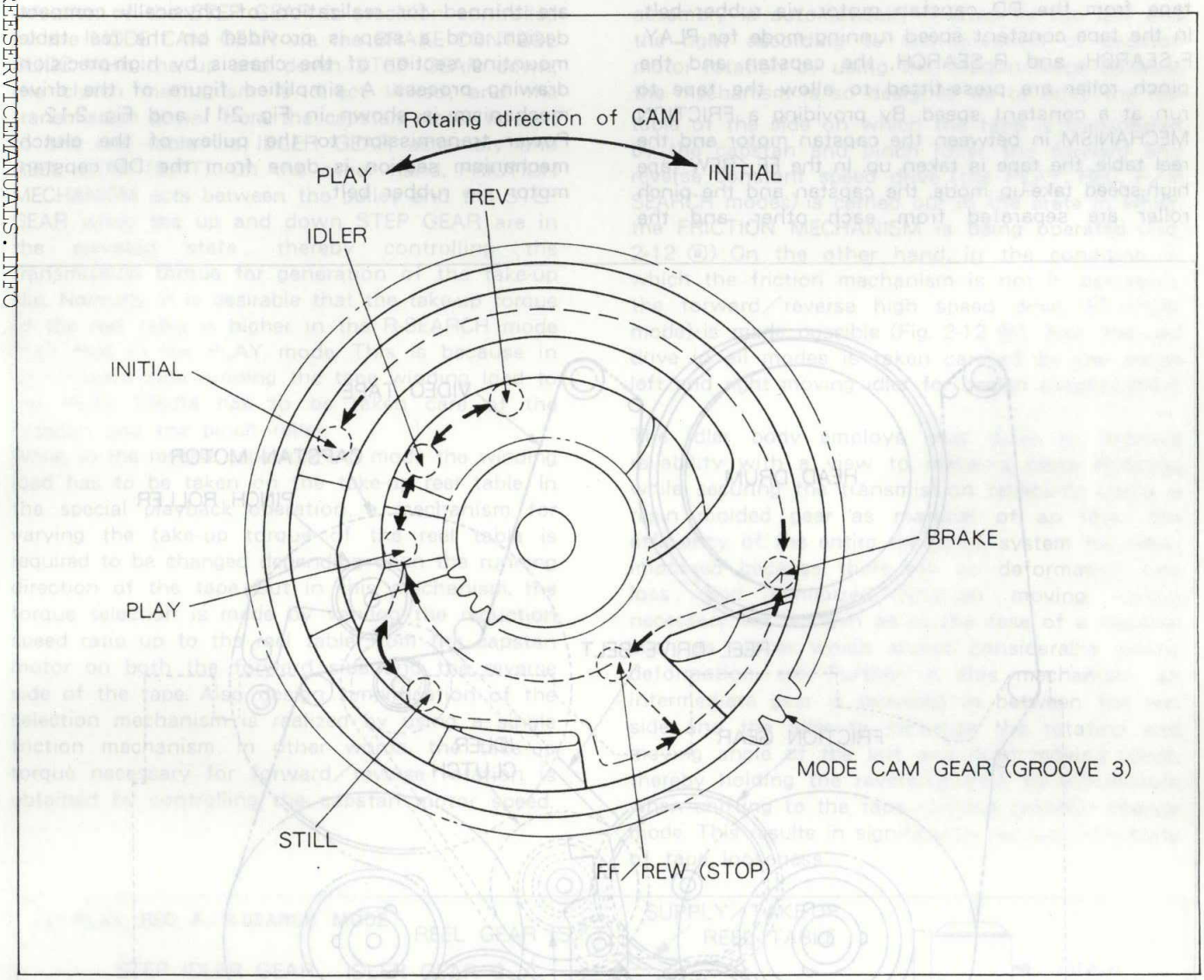

Fig. 2-10 POSITIONING OF BRAKE CAM SLIDE-PIN ON THE GROOVE 3 OF MODE CAM GEAR

Published in Heiloo, Holland.

www.freeservicemanuals.info 11/15/15

Digitized by WWW.FREESERVICEMANUALS.INFO

2-3-2. Reel Table Drive Clutch Lock and Release Mechanism

As described in the preceding section, using the selection of the step gear (CLUTCH MECHANISM), two mechanisms which are driven by being selected via direct drive or via FRICTION MECHANISM from the capstan motor, to execute the reel table drive. The operating status of the clutch lock and the releasing mechanism is shown in Fig. 2-13.

Fig. 2-13 ① shows the tape unloading position (INITIAL position) when the power for the mechanism operating mode is switched off.

At that times all the levers are in the initial positions, and the clutch is released also so that a route for reel table drive is created via a friction mechanism.

Fig. 2-13 ② shows that the mechanism operation mode has executed the tape loading and that it has completed its movement to the STOP (stand-by), FF/REW position.

At this time, the CLUTCH ACT LEVER is operated by the hook of the ACT BRAKE SLIDE to move the ACT CLUTCH LEVER in the direction of arrow via the CLUTCH LEVER and the CLUTCH CHANGE LEVER. Now, the up and down STEP GEAR is placed into the direct coupled state. In the FF/REW mode, the reel table is directly driven so that the rotation of the capstan motor is directly transmitted to make high-speed rotation drive possible. When shifting the mode to the STOP from the FF/REW in this condition, the mechanism mode position is once moved back to the brake position, and when the reel table brake is instantaneously applied, the clutch is released once at the same time, after which it returns to the same mechanism mode as the FF/REW mode once again. Now, it is placed in a waiting state in the same condition of the STOP mode as shown in Fig. 2-13 ②.

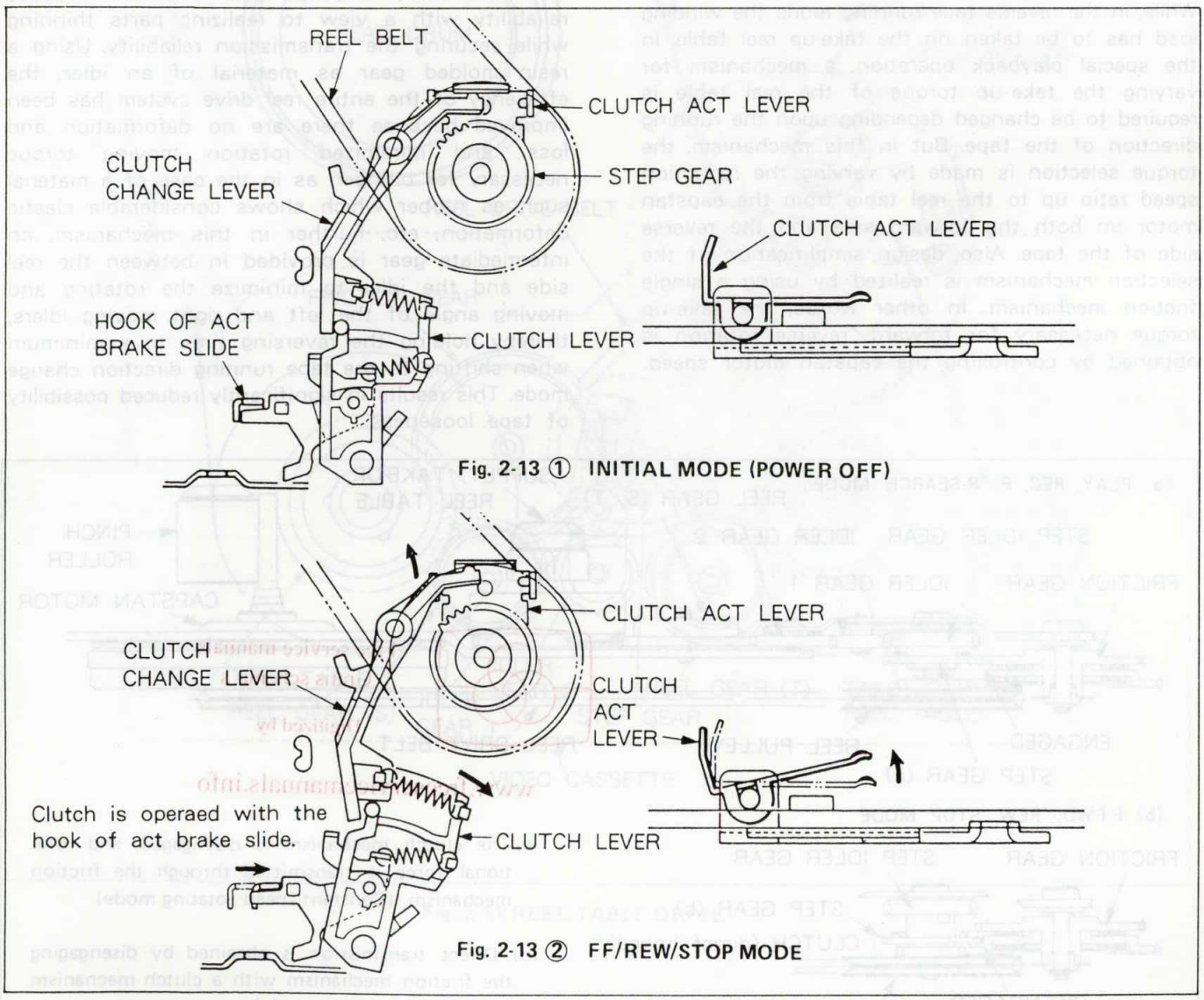

Fig. 2-13 ① INITIAL MODE (POWER OFF)

Fig. 2-13 ② FF/REW/STOP MODE

Fig. 2-13 ① – ③ REEL TABLE DRIVE CLUTCH LOCK AND RELEASE MECHANISM

Published in Heiloo, Holland.

www.freeservicemanuals.info 11/15/15

Digitized by WWW.FREESERVICEMANUALS.INFO

Fig. 2-13 ③ shows the completion state of a shift to the PLAY mode via the STILL mode from the STOP (FF/REW) mode for the mechanism mode position.

In the case of this mode shifting, the movement of the BRAKE ACT SLIDE remains fixed. So, the CLUTCH ACT LEVER should be unlocked by the movement of the hook of the MAIN SLIDE PLATE to cause the clutch to be released. This movement in turn causes the capstan motor rotation to be transmitted via the friction mechanism. So, the constant speed rotation drive necessary for the PLAY (REC) mode and SEARCH mode is made possible.

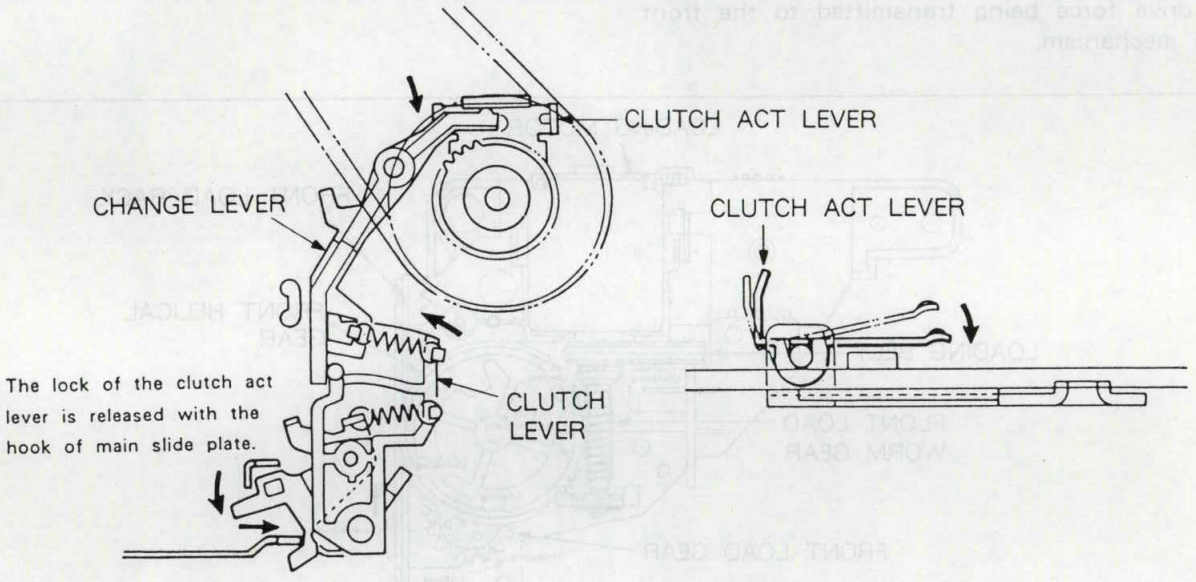
CLUTCH ACT LEVER
CHANGE LEVER
CLUTCH ACT LEVER
The lock of the clutch act lever is released with the hook of main slide plate.
CLUTCH LEVER

Fig. 2-13 ③ FF/REW/STOP MODE → STILL MODE → PLAY MODE

Published in Heiloo, Holland.

www.freeservicemanuals.info 11/15/15

Digitized by WWW.FREESERVICEMANUALS.INFO

2-4. FRONT LOADING DRIVE SELECTION MECHANISM

In the P-90 mechanism, the motor dedicated to the use of front loading is not employed. The drive source is utilized instead of the tape loading motor. As shown in Fig. 2-14 ⓐ/ⓑ, during the front loading the FRONT LOAD WORM GEAR directly coupled to the tape loading motor axle and the FRONT HELICAL GEAR with several teeth missing are engaged with each other and rotated for transmission of the drive force to the front loading mechanism. When the cassette tape is inserted completely in the mechanism, the FRONT HELICAL GEAR is automatically disengaged from the FRONT LOAD WORM GEAR. After that, the tape loading operation is performed without the tape loading motor drive force being transmitted to the front loading mechanism.

While the drive force is being transmitted to the front loading mechanism, the CAM GROOVEs of the before-mentioned MAIN CAM GEAR and the MODE CAM GEAR are flat in cam line pattern. These are therefore held without changing the mode state of the mechanism in any way.

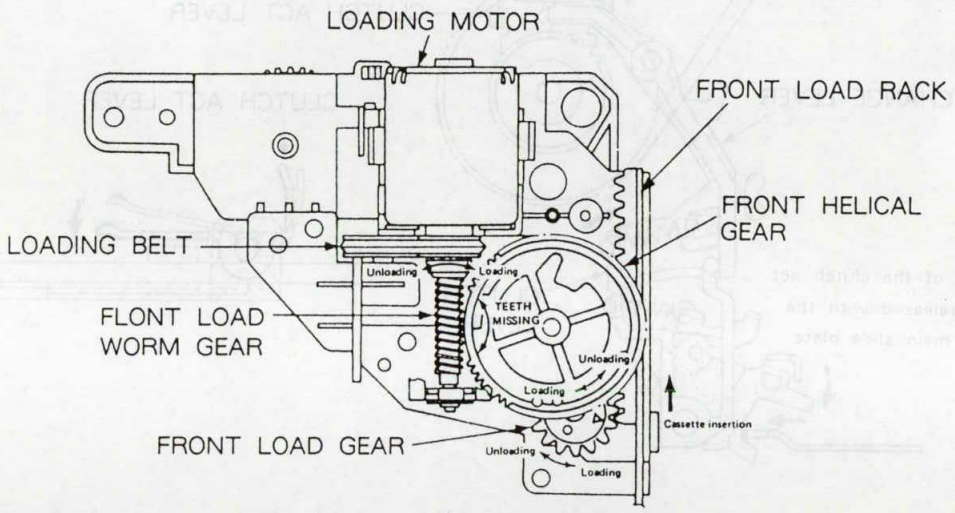

Fig. 2-14 ⓐ FRONT LOADING DRIVE SELECTION MECHANISM (CASSETTE INSERTED POSITION)

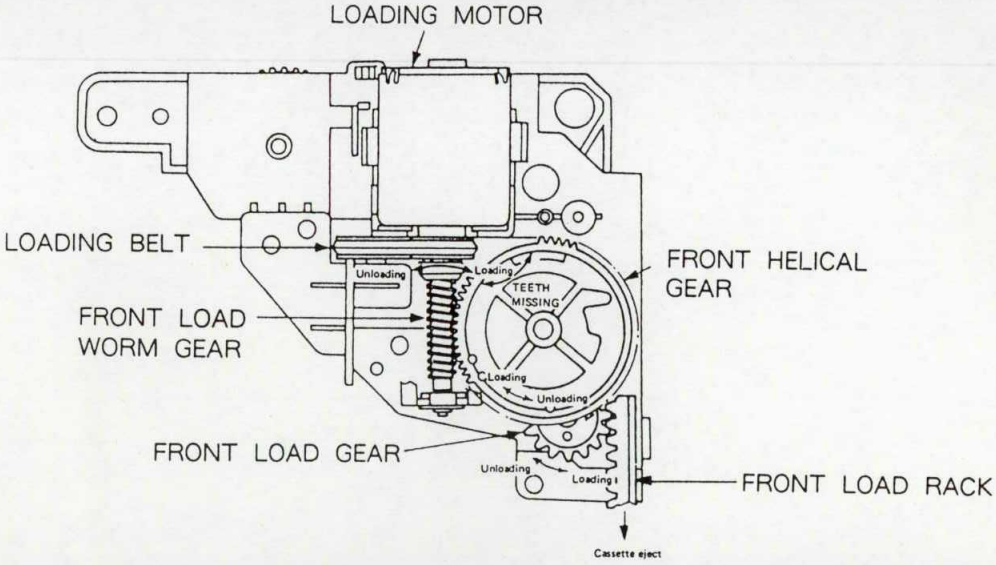

Fig. 2-14 ⓑ FRONT LOADING DRIVE SELECTION MECHANISM (CASSETTE EJECTED POSITION)

Published in Heiloo, Holland.

www.freeservicemanuals.info 11/15/15

Digitized by SERVICE MANUALS INFO

(A) Cassette inserting operation

When inserting a cassette from the cassette ejected state of Fig. 2-14 ⓑ, the FL START SWITCH shown in Fig. 2-15 is turned OFF, to cause the loading motor to be rotated in the direction of insetting. As a result, the FRONT LOAD RACK is drawn in, and the front loading is made up to the cassette tape completion point. So, it is locked in the grooves shown in Fig. 2-15 to complete cassette inserting. At that time, the FRONT HELICAL GEAR is positioned at ⓐ of Fig. 2-14, and is released from the front loading mechanism, therefore, the tape loading operation is continuously performed.

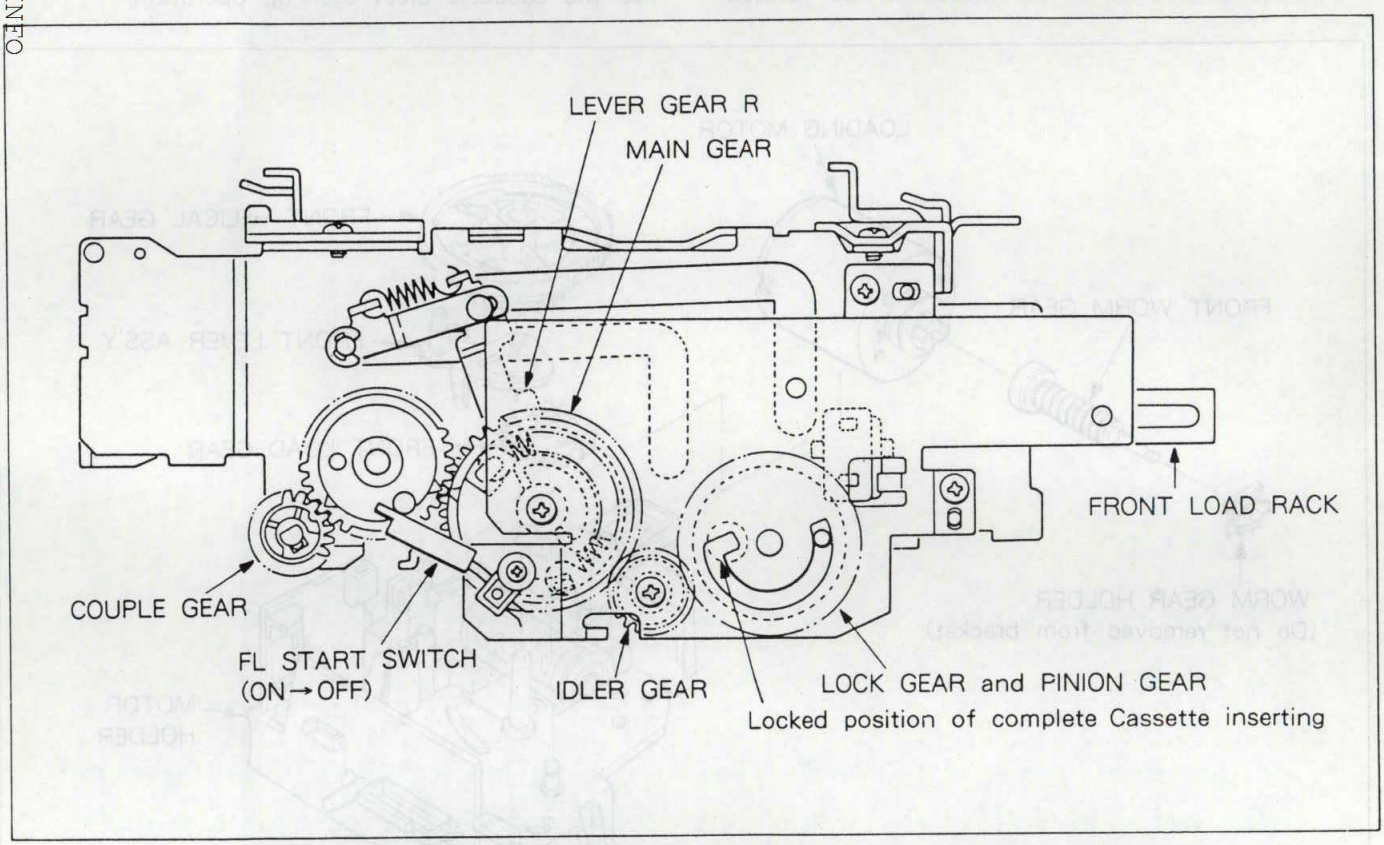

Fig. 2-15 CASSETTE HOLDER MECHANISM (CASSETTE INSERTING OPERATION)

Published in Heiloo, Holland.

www.freeservicemanuals.info 11/15/15

Digitized by WWW.FREESERVICEMANUALS.INFO

(B) Cassette ejection operation

The components of the front loading mechanism is shown in Fig. 2-16.

When ejecting the cassette from the inserted state shown in Fig. 2-14 ⓐ, the FRONT ACT LEVER is pushed in the direction of arrow due to the ACT SLIDE PLATE moves in the direction of arrow shown in Fig. 2-17. As a result, the FRONT LEVER assembly is turned counterclockwise via the FRONT LOAD SLIDE to cause the FRONT HELICAL GEAR to be engaged with the FRONT LOAD WORM GEAR of the loading motor. At that time, the loading motor is being rotated counterclockwise, so that the FRONT HELICAL GEAR is caused to be rotated counterclockwise also to carry out the front unloading via the FRONT LOAD GEAR and the FRONT LOAD RACK. At the same time, the FRONT ACT LEVER is operated counterclockwise by the hook of the FRONT HELICAL GEAR. This releases the lock being pushed in the direction of arrow indicated by the ACT SLIDE PLATE. So, the FRONT LOAD SLIDE assembly now moves to the initial position to prepare for the next ejection operation. Incidentally, the movement of the FRONT LEVER assembly performs an important function of positioning the FRONT HELICAL GEAR (Fig. 2-14 ⓐ) upon completion of cassette mounting, in addition to the cassette eject start-up operation.

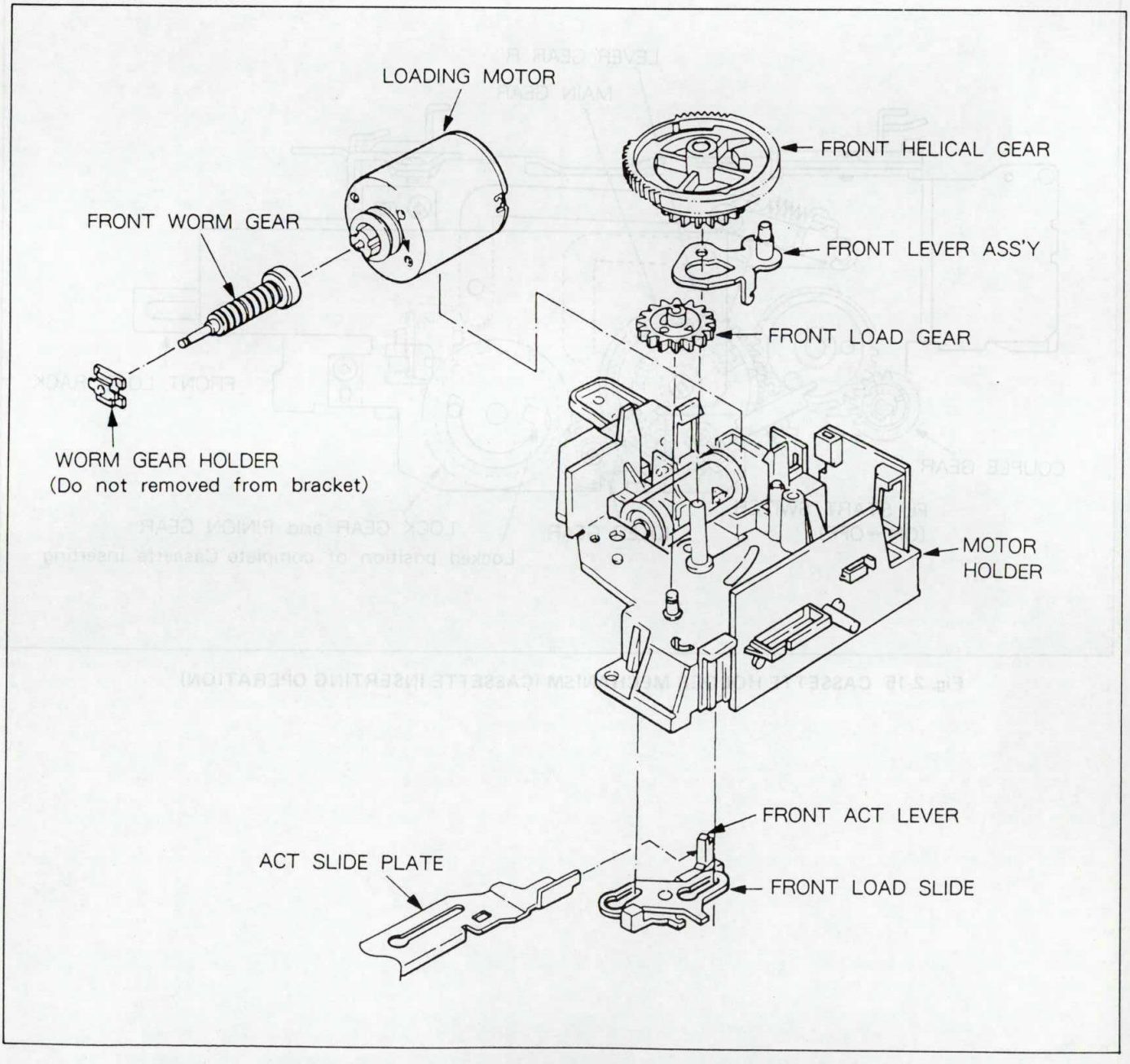

Fig. 2-16 FRONT LOADING DRIVE SELECTION MECHANISM

Published in Heiloo, Holland.

www.freeservicemanuals.info 11/15/15

Digitized by WWW.FREESERVICEMANUALS.INFO

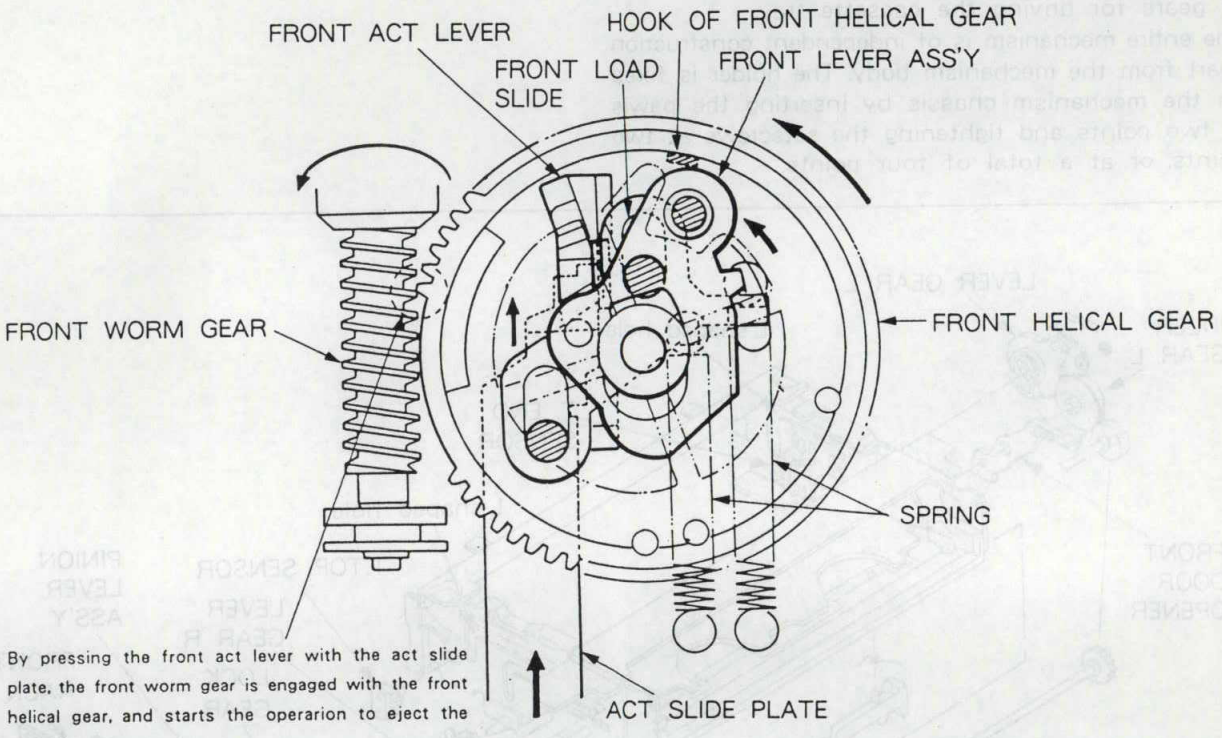
FRONT ACT LEVER
FRONT LOAD SLIDE
HOOK OF FRONT HELICAL GEAR
FRONT LEVER ASS'Y
FRONT WORM GEAR
FRONT HELICAL GEAR
SPRING
ACT SLIDE PLATE
By pressing the front act lever with the act slide plate, the front worm gear is engaged with the front helical gear, and starts the operarion to eject the cassette.

Fig. 2-17 CASSETTE EJECTION START OPERATION (See through top view)

Published in Heiloo, Holland.

www.freeservicemanuals.info 11/15/15

Digitized by WWW.FREESERVICEMANUALS.INFO

2-5. CASSETTE HOLDER MECHANISM

2-5-1. Components

The exploded view of the cassette holder mechanism is shown in Fig. 2-18. This mechanism consists of a cassette tray for feeding the cassette tape to the specified position of the mechanism chassis, a side plate provided with L type holes for supporting and guiding it, the top plate for regulating the width of left and right, and a group of gears for driving the cassette tray.

The entire mechanism is of independent construction apart from the mechanism body. The holder is fixed on the mechanism chassis by inserting the pawls at two points and tightening the setscrews at two points, or at a total of four points.

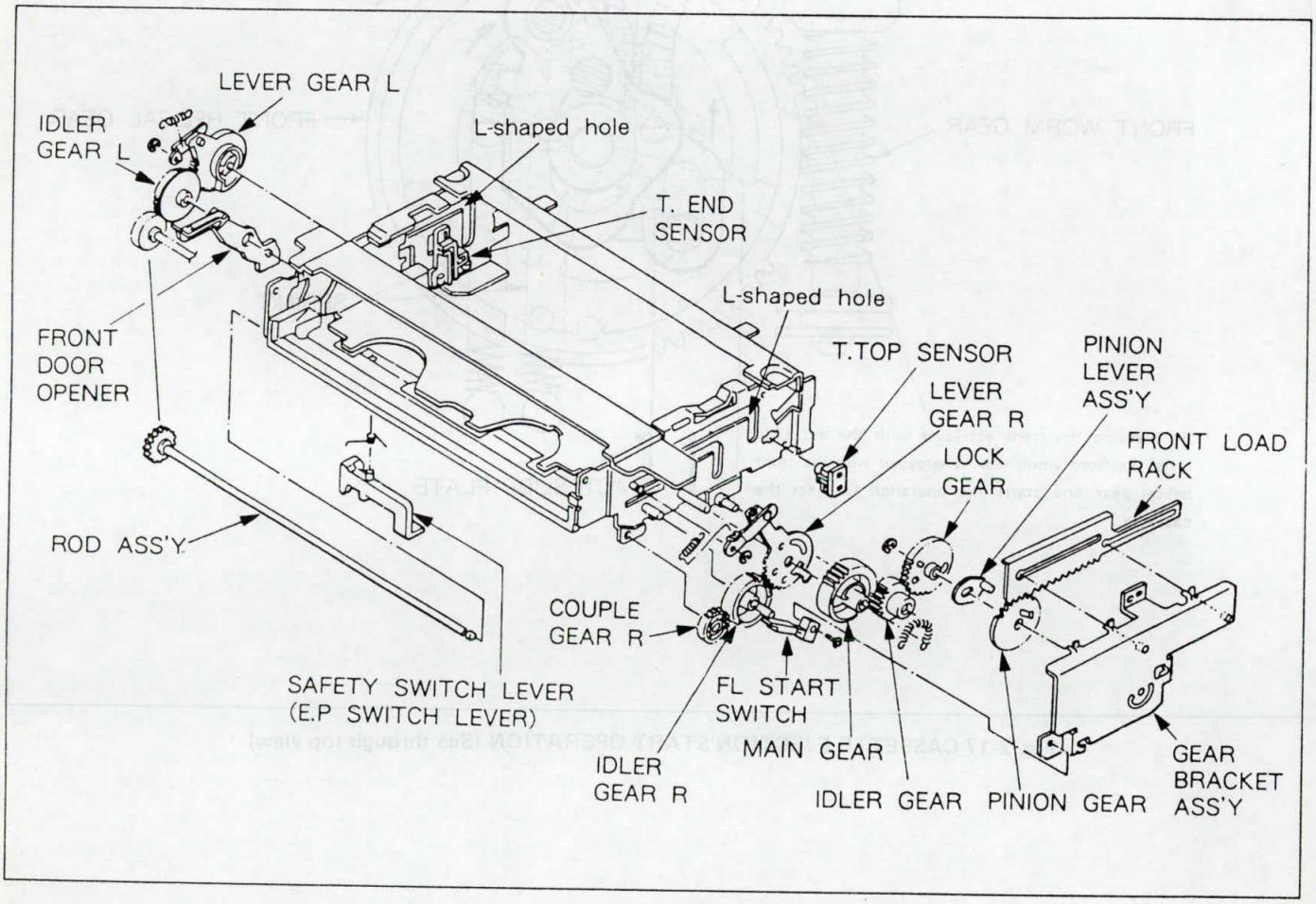

Fig. 2-18 EXPLODED VIEW OF THE CASSETTE HOLDER MECHANISM

Published in Heiloo, Holland.

www.freeservicemanuals.info 11/15/15

Digitized by WWW.FREESERVICEMANUALS.INFO

2-5-2. Description of Cassette Holder

The cassette holder is of motor-less design, as the lowering of mechanism height and driving source are done by the loading motor of the mechanism body.

As a substitute for the worm gear system hitherto used in the major drive section for the drive selection mechanism mentioned in section 2-4., the RACK LOADING system is adopted in this cassette holder mechanism. By this mechanism the motor-less design can be realized. An exploded view of the mechanism is shown in Fig. 2-19. A description of the operation is made below along with Fig. 2-19.

To press-fit the cassette tape after sending it onto the mechanism chassis, the PINION GEAR section is triple construction. The FRONT LOAD RACK side and the IDLER GEAR side are independently engaged. The PINION GEAR and the LOCK GEAR are connected from the PINION LEVER PIN riveted to the PINION LEVER. Even after feeding the cassette tape to the specified position of the mechanism chassis, the FRONT LOAD RACK slides, giving the rotation to the PINION GEAR which is engaged with the FRONT LOAD RACK. At that time, a pin is dropped into the groove section provided on the GEAR BRACKET ASS'Y.

The other LOCK GEAR is fixed by this PINION LEVER PIN, and the cassette tape is press-fitted onto the mechanism chassis by linked IDLER GEAR. The before-mentioned FRONT LOAD RACK and the PINION GEAR are set free after dropping the PINION LEVER PIN into the groove section. So, the drive force of the loading motor is sent to the mechanism body.

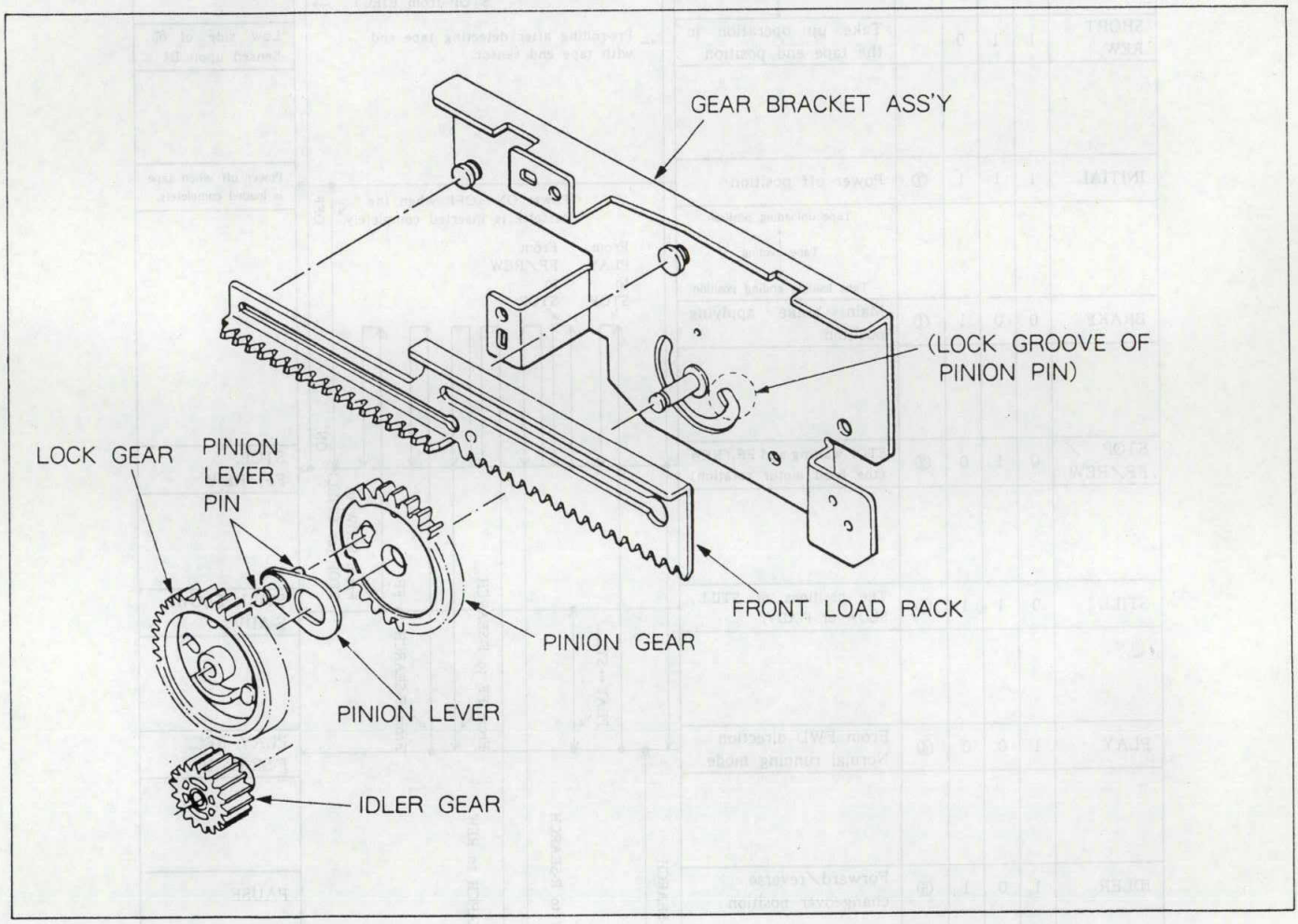

Fig. 2-19 RACK LOADING MECHANISM OF CASSETTE HOLDER

Published in Heiloo, Holland.

www.freeservicemanuals.info 11/15/15

Digitized by WWW.FREESERVICEMANUALS.INFO

3. MECHANISM CONTROL

3-1. MODE ARRANGEMENT

This mechanism is arranged in such a mode layout as shown in Table. 3-1 and as described in section 2-1. The mode sensing switch described below is used for control of these modes.

3-2. MODE DETECTION SWITCH

For mode detecting one leaf switch (FL START SWITCH and one rotary switch (MECHANISM MODE SWITCH) are used in combination.

Mechanism Mode	Mechanism Mode Switch 3	2	1	HEX DATA	Function	Main Mode Shifting Conditions	VTR Operation Mode
EJECT	–	–	–		Eject position	Detected by FL start switch	EJECT
					Front loading/Unloading	← Cassette insertion through STOP or PLAY mode STOP from EJECT →	
SHORT REW	1	1	0		Take up operation in the tape end position	← Pre-rolling after detecting tape end with tape end sensor.	Low side of ⑥. Sensed upon IN
INITIAL	1	1	1	⑦	Power off position	Power ON↔OFF when the cassette is inserted completely.	Power off when tape is loaded completely
					Tape unloading position Tape loading Tape loading ending position	From PLAY to STOP From FF/REW to STOP	
BRAKE	0	0	1	①	Main brake applying position		
STOP / FF/REW	0	1	0	②	STOP waiting and FF/REW (the head motor rotation)		STOP, FF/REW
STILL	0	1	1	③	The positions of STILL, SLOW or F-ADV.	PLAY↔STILL From FF to F-SEARCH From F-SEARCH to FF From SLOW to STOP (or STILL)	STILL, SLOW, F-ADV
PLAY	1	0	0	④	From FWD direction Normal running mode		PLAY, REC, F-SEARCH
IDLER	1	0	1	⑤	Forward/reverse changeover position	PLAY↔R-SEARCH From REW to R-SEARCH From R-SEARCH to REW	PAUSE
REV	1	1	0	⑥	From REV direction Normal running mode		R-SEARCH

Table 3-1

Published in Heiloo, Holland.

www.freeservicemanuals.info 11/15/15

Digitized by WWW.FREESERVICEMANUALS.INFO

(1) Switch component
The mode switch consists of FL START SWITCH for detecting the cassette ejection and insertion, and MECHANISM MODE SWITCH for detecting the each mode position of the mechanism. As can be understood from Fig. 3-1, the MECHANISM MODE SWITCH rotates in excess of 360 degrees. Therefore, the sensing of a signal from the MECHANISM MODE SWITCH is done by the leaf switch.
In the P88 and P89 mechanisms, incidentally, short REW position is detected by the FL END SW, but in the P90 mechanism, the FL END SWITCH is not required due to a change in the internal structure of the MECHANISM MODE SWITCH.

(2) Mechanism mode switch
The mechanism mode switch consists of four terminals, namely, COM, DATA1, DATA2, and DATA3. These are processed as 3-bit signals for discrimination of seven modes.
The MECHANISM MODE SWITCH is not interchangeable with the hither to available black switch due to a change in its internal structure. Be sure therefore to use a blue switch.

3-3. CONSIDERATION TO FULL LOADING

① In the normal stop condition, the head drum is rotated to facilitate the start-up of the image at the time of playback, but it is conceivable that this is left undisturbed for an extended period of time. This may result in wear of the video head. For this reason, when five minutes elapse from the stop condition, the head drum stops rotating.
② To prevent the tape from being caught in the head drum due to dew forming, etc., the tape is housed in the unloaded cassette when turning the power off.

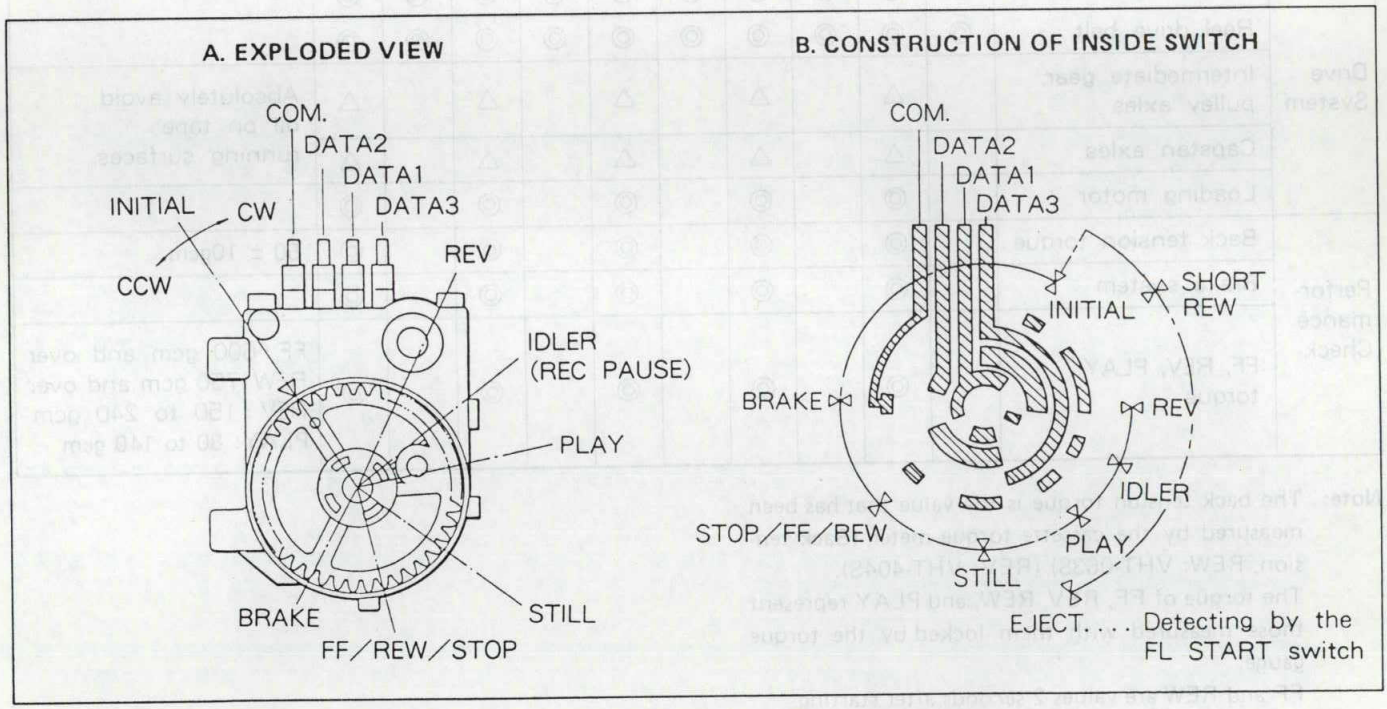

Fig. 3-1 MECHANISM MODE SWITCH (ROTARY SWITCH)

Published in Heiloo, Holland.

www.freeservicemanuals.info 11/15/15

Digitized by WWW.FREESERVICEMANUALS.INFO

4. MECHANISM MAINTENANCE AND CHECKING

4-1. PERIODIC CHECKING AND MAINTENANCE ITEMS AND SERVICE JIGS

The following maintenance and periodic checking procedures are recommended to ensure proper operation, and to protect the tape from dirt and damage. Also, these procedures should always be followed after repairing the unit.

4-1-1. Periodic Check Items

○ Cleaning ◎ Confirmation △ Lubrication

Part \ Usage Time (hours)		500	1000	1500	2000	2500	3000	3500	4000	4500	5000	Remarks
Tape Guide System	Tape running surfaces	○	○	○	○	○	○	○	○	○	○	
	ACE head	○	○	○	○	○	○	○	○	○	○	
	Drum (cylinder)	○	○	○	○	○	○	○	○	○	○	Head life depends heavily on operating conditions.
Drive System	Loading belt	◎	◎	◎	◎	◎	◎	◎	◎	◎	◎	
	Reel drive belt	◎	◎	◎	◎	◎	◎	◎	◎	◎	◎	
	Intermediate gear, pulley axles		△		△		△		△		△	Absolutely avoid oil on tape running surfaces.
	Capstan axles		△		△		△		△		△	
	Loading motor		◎		◎		◎		◎		◎	
Performance Check	Back tension torque		◎		◎		◎		◎		◎	50 ± 10gcm.
	Brake system		◎		◎		◎		◎		◎	
	FF, REV, PLAY torque		◎		◎		◎		◎		◎	FF : 600 gcm and over REW : 750 gcm and over REV : 150 to 240 gcm PLAY : 80 to 140 gcm

Note: The back tension torque is the value that has been measured by the cassette torque meter (Back tension, REW: VHT-063S) (REV: VHT-404S).
The torque of FF, REV, REW, and PLAY represent those measured with them locked by the torque gauge.
FF and REW are values 2 seconds after starting.
Torque Tape: VHT-063S (J-6082-066-A)
VHT-404S (J-6082-067-A)

Published in Heiloo, Holland.

www.freeservicemanuals.info 11/15/15

Digitized by WWW.FREESERVICEMANUALS.INFO

4-1-2. Cleaning

① Drum (COMPL CYLINDER) and Video Heads (See Fig. 4-1-1.)

1) Wrap a chamois leather around your finger and moisten it with methyl alcohol.
2) Move the chamois leather to left and right several times on the video head to clean. There is a video head also on the opposite side, so clean it likewise. In Hi-Fi models, clean the audio head also.
3) Clean the tape path surface of the cylinder in the same way.

Note : Always turn power off before cleaning. Do never move the chamois leather vertically or apply too much force to the head ; it may be damaged.

② Cleaning of the Tape Guide System (See Fig. 4-1-2.)

1) Set the EJECT mode and clean the tape guide system (tape guides, impedance roller, FTE head, ACE head, pinch rollers, capstan axles, etc.) with a chamois leather moistened with methyl alcohol.

Note : Make sure that no oil, grease, etc. adhere to the chamois leather and that heads are not damaged.

③ Cleaning of the Drive System

1) Clean the drive system (loading belt, reel drive belt, pulley, supply reel table, etc.) with a soft cloth moistened with methyl alcohol.

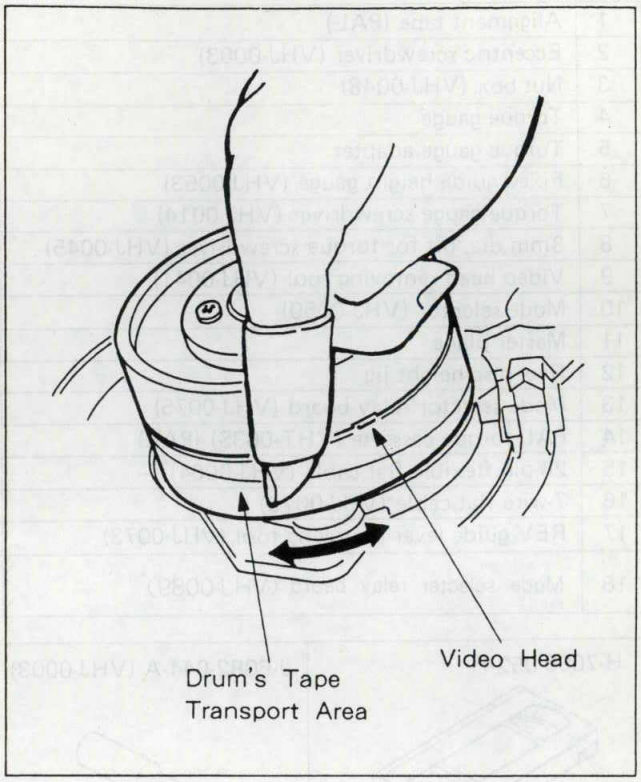

Fig. 4-1-1.

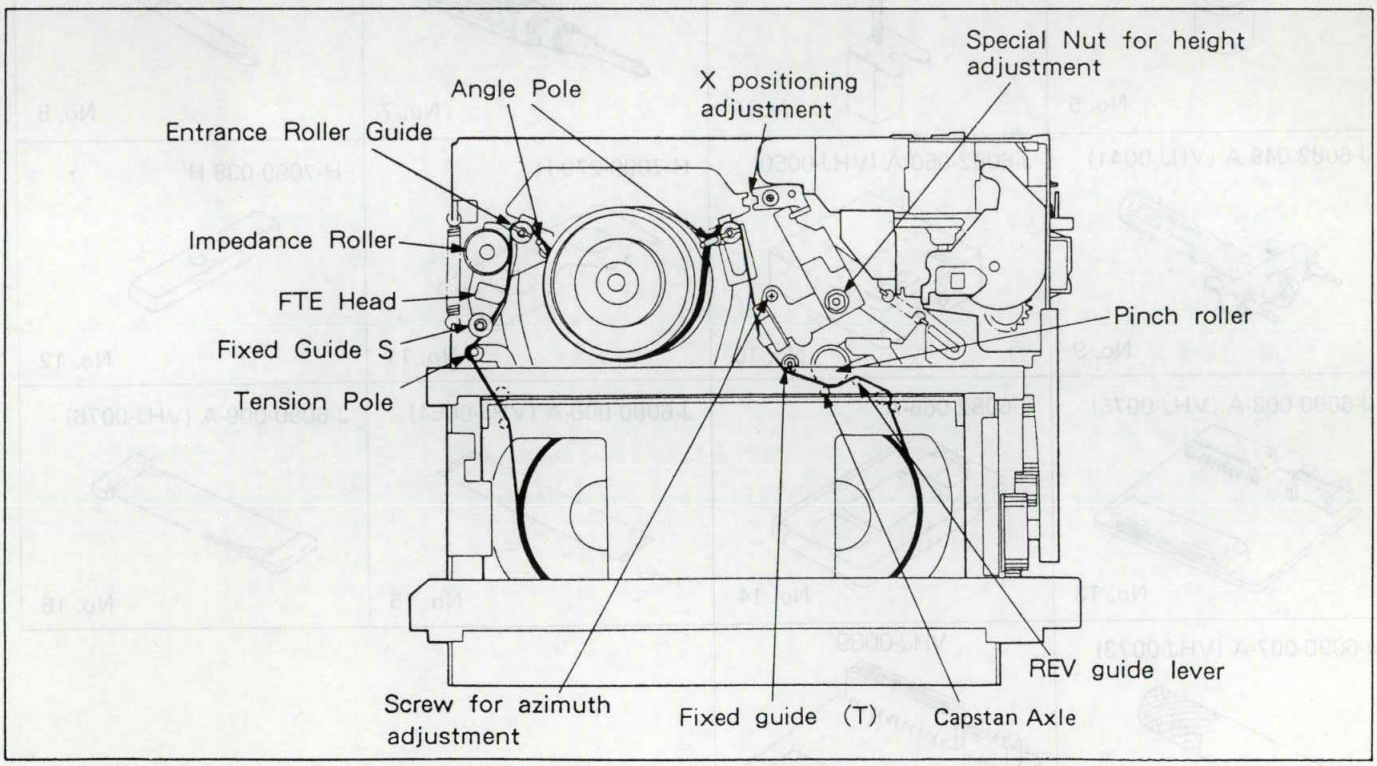

Fig. 4-1-2. Cleaning

Published in Heiloo, Holland.

www.freeservicemanuals.info 11/15/15

Digitized by WWW.FREESERVICEMANUALS.INFO

4-1-3. Service Jigs

No.	Jig	Jig No.	Remarks
1	Alignment tape (PAL)	H-7099-052-H	PAL-NORMAL
2	Eccentric screwdriver (VHJ-0003)	J-6082-044-A	For tape path adjustment
3	Nut box (VHJ-0048)	J-6082-045-A	For tape path adjustment
4	Torque gauge	H-7099-039-H	For reel take-up torque measurement
5	Torque gauge adapter	H-7099-035-H	For reel take-up torque measurement
6	Fixed guide height gauge (VHJ-0053)	J-6082-052-A	For fixed gaude (S) height adjustment
7	Torque gauge screwdriver (VHJ-0014)	J-6082-047-A	For screw fastening torque adjustment
8	3mm dia. bit for torque screwdriver (VHJ-0045)	J-6082-048-A	Spare bit for the torque gauge screwdriver
9	Video head removing tool (VHJ-0041)	J-6082-049-A	For upper drum removal
10	Mode selector (VHJ-0050)	J-6082-050-A	For mechanism mode selection
11	Master plane	H-7099-279-H	Reel table height
12	Reel disc height jig	H-7099-038-H	Reel table height
13	Mode selector relay board (VHJ-0075)	J-6090-008-A	Relay board for mode selector
14	PAL torque cassette (VHT-063S) (PAL)	J-6082-066-A	For back tension torque
15	26-pin flexible flat cable (VHJ-0064)	J-6090-006-A	Spare cable for mode selector
16	7-wire flat cable (VHJ-0076)	J-6090-009-A	Spare cable for relay board
17	REV guide lever removing tool (VHJ-0073)	J-6090-007-A	For REV guide lever removal
18	Mode selecter relay baord (VHJ-0089)	VHJ-	Relay board for mode selector [For compact size model (width : 360mm)]

H-7099-052-H

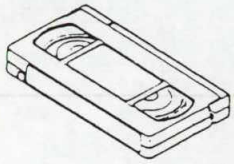

No. 1

J-6082-044-A (VHJ-0003)

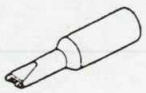

No. 2

J-6082-045-A (VHJ-0048)

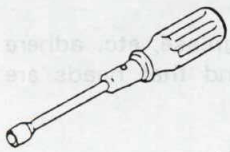

No. 3

H-7099-039-H

No. 4

H-7099-035-H

No. 5

J-6082-052-A (VHJ-0053)

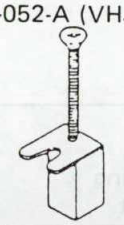

No. 6

J-6082-047-A (VHJ-0014)

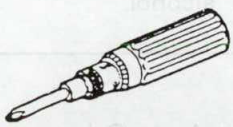

No. 7

J-6082-048-A (VHJ-0045)

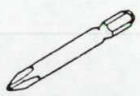

No. 8

J-6082-049-A (VHJ-0041)

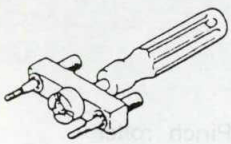

No. 9

J-6082-050-A (VHJ-0050)

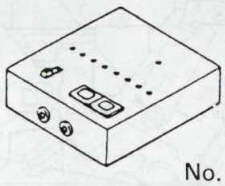

No. 10

H-7099-279-H

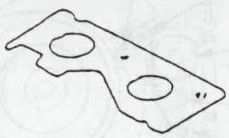

No. 11

H-7099-038-H

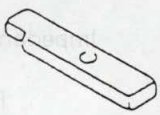

No. 12

J-6090-008-A (VHJ-0075)

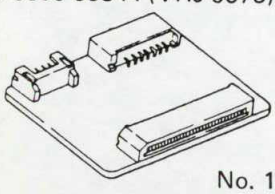

No. 13

J-6082-066-A

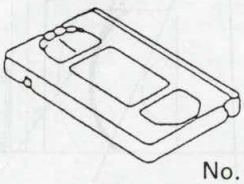

No. 14

J-6090-006-A (VHJ-0064)

No. 15

J-6090-009-A (VHJ-0076)

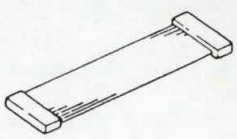

No. 16

J-6090-007-A (VHJ-0073)

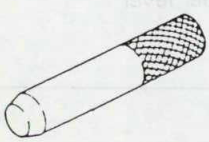

No. 17

VHJ-0089

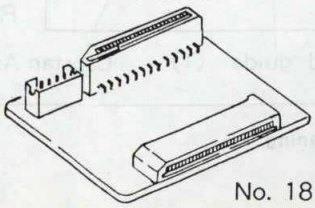

No. 18

Published in Heiloo, Holland.

www.freeservicemanuals.info 11/15/15

Digitized by WWW.FREESERVICEMANUALS.INFO

4-2. MODE SELECTOR (VHJ-0050) HANDLING INSTRUCTIONS

The mode selector drives the loading motor of the P88 mechanism with its internal batteries (UM-2 × 4 = 6V), using LEDS to indicate the mode (EJECT, INITIAL, BRAKE, STOP/REW/FWD, STILL, PLAY, IDLER, REV) simultaneously with EJECT⇔REV mode changes.
Instead of the internal batteries, an external DC 6V power supply can also be used.

4-2-1. Part Names (See Fig. 4-2-1)

Free service manuals
Gratis schema's
Digitized by
www.freeservicemanuals.info

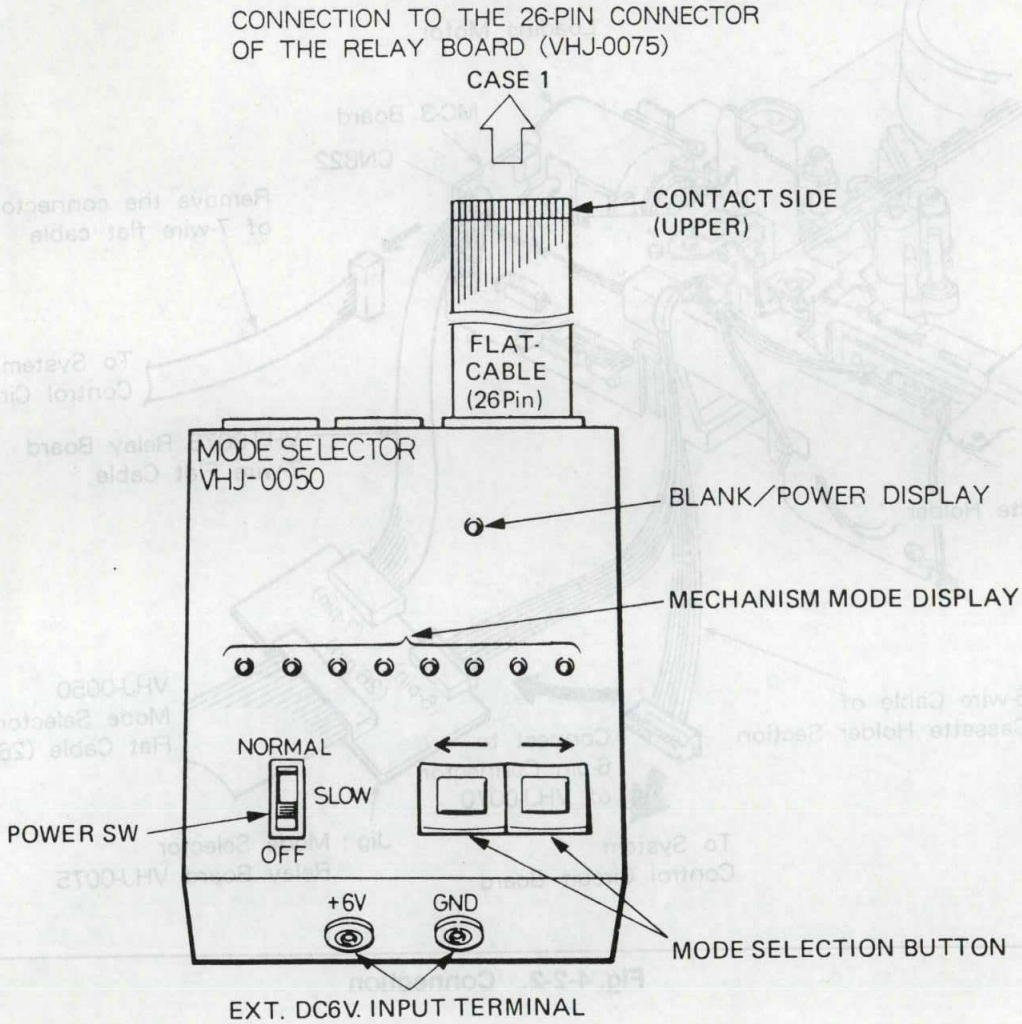

Fig. 4-2-1

Published in Heiloo, Holland.

www.freeservicemanuals.info 11/15/15

Digitized by WWW.FREESERVICEMANUALS.INFO

4-2-2. Connection Method 1 (See Fig. 4-2-2) (For "Mid mount" model)

1) Remove the 7-wire cable connected from the system control circuit to the connector (CN822) of the MC-3 board.
2) Connect the 7-wire cable (VHJ-0076) between the connector (CN822) of the MC-3 board and the 7-pin connector of the Mode Selector Connection Board (VHJ-0075).
3) Remove the 6-wire cable extending from the cassette holder section from the connector of the System Control Circuit Board and connect it to the 6-pin connector of the Mode Selector Connection Board (VHJ-0075).
4) Connect a supplied 26-pin flat cable (VHJ-0064) of the mode selector (VHJ-0050) between the mode selector body and the 26-pin connector of the Connection Board (VHJ-0075).

Note: Care should be taken to avoid mistaking the direction of the contacting side when connecting a flexible flat cable.

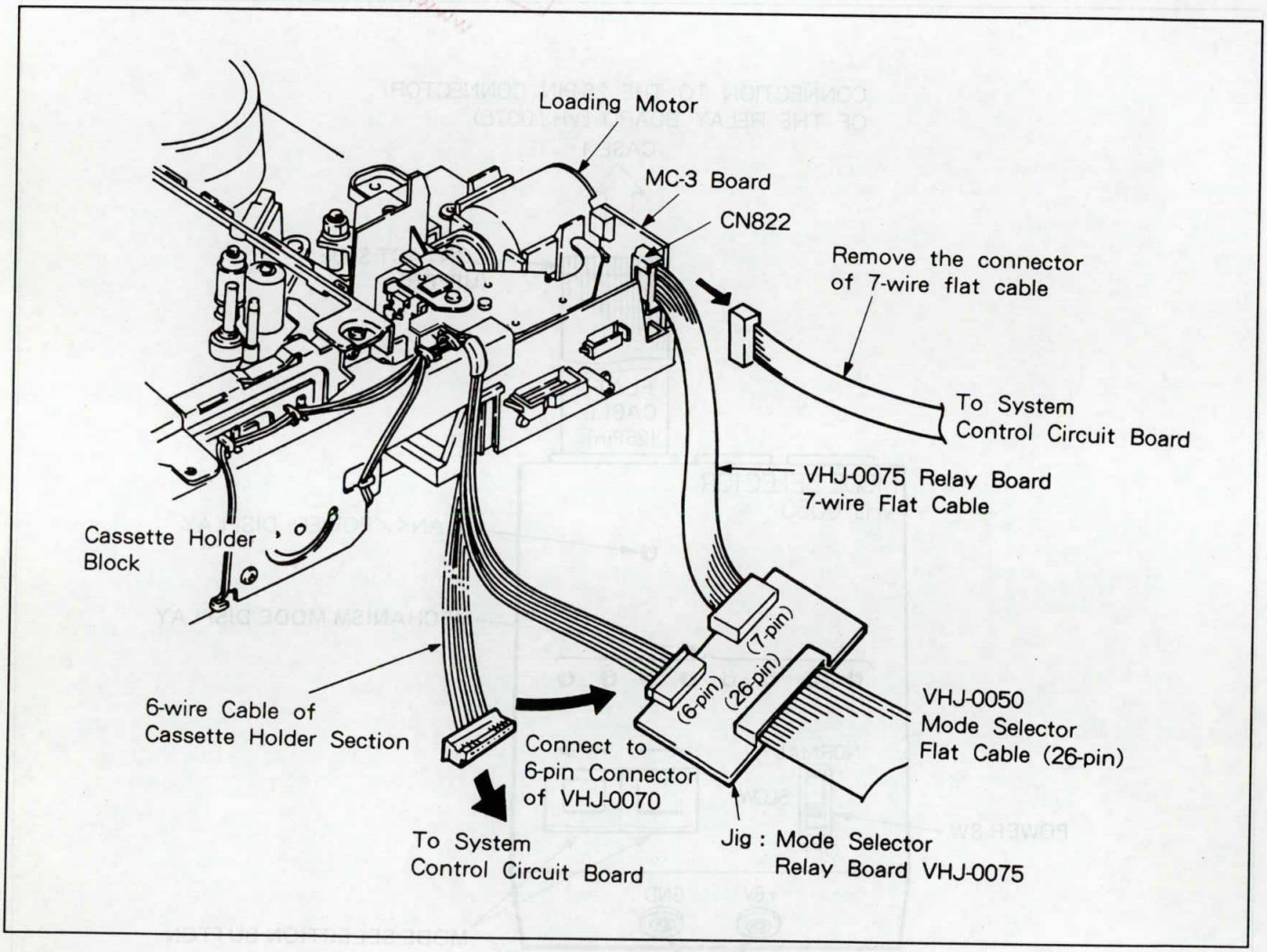

Fig. 4-2-2. Connection

Published in Heiloo, Holland.

www.freeservicemanuals.info 11/15/15

Digitized by WWW.FREESERVICEMANUALS.INFO

4-2-3. Connection Method 2 (See Fig. 4-2-3) (For compact size model)

1) Remove the 24-pin flat cable extending from the COMPL MC-2 board connector (CN811) from the connector of the system control circuit board, and connect it to the 24-pin connector of mode selector relay board (VHJ-0089).
2) Remove the 6-wire cable extending from the cassette holder section from the connector of the MC-2 board connector (CN817), and connect it to the 6-pin connector of the mode selector relay board (VHJ-0089).
3) Connect a supplied 26-pin flat cable (VHJ-0064) of the mode selector (VHJ-0050) between the mode selector body and the 26-pin connector of the mode selector relay board (VHJ-0089).

Note: Care should be taken to avoid mistaking the direction of the contacting side when connecting a flexible flat cable.

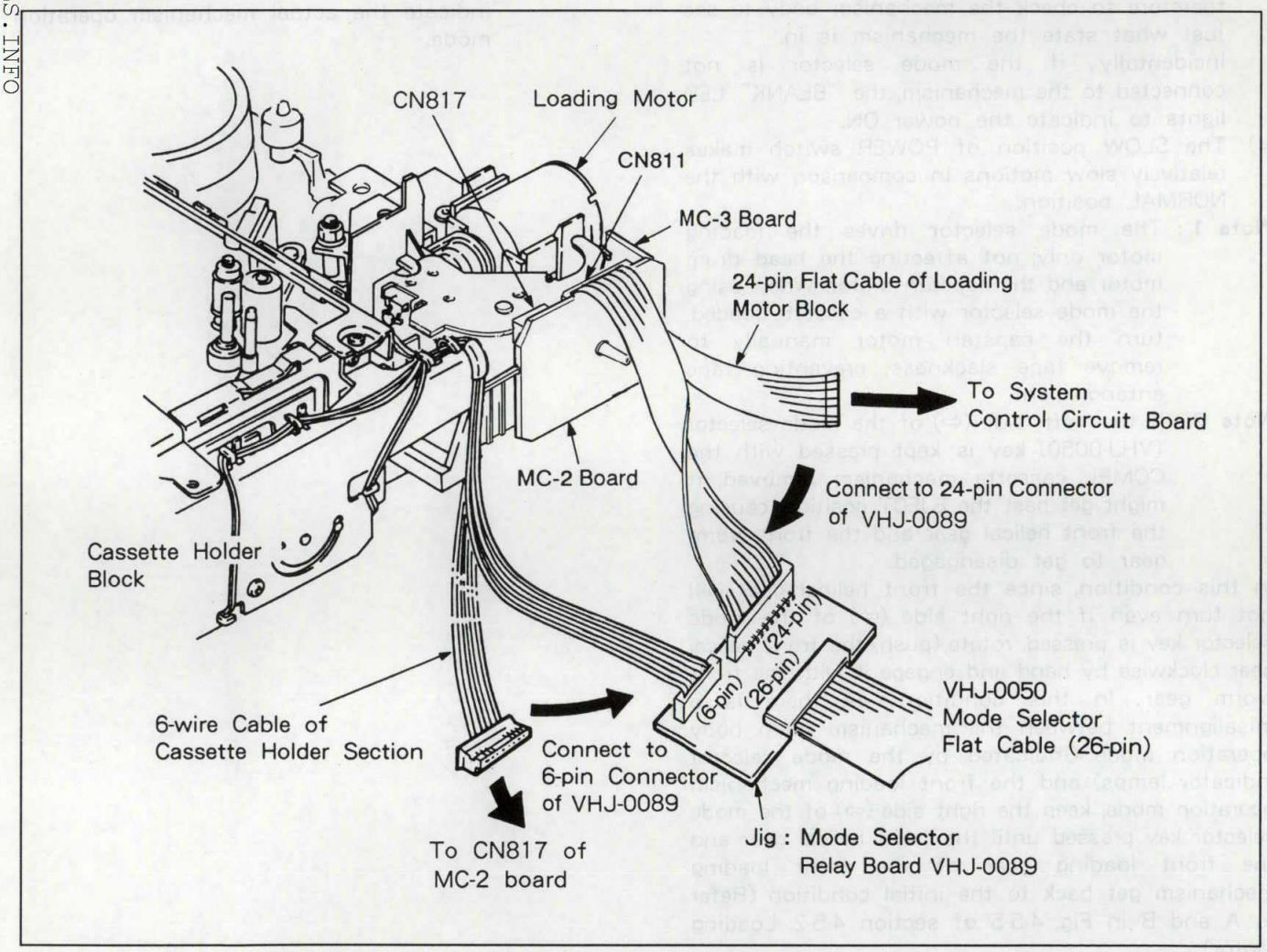

Fig. 4-2-3. Connection

Published in Heiloo, Holland.

www.freeservicemanuals.info 11/15/15

Digitized by WWW.FREESERVICEMANUALS.INFO

4-2-4. Handling Method

1) Keep the right side (⇨) of the mode selector key pressed, and the mode will change in the following sequence : EJECT⇨INITIAL⇨BRAKE⇨STOP/REW/FWD⇨STILL⇨PLAY⇨IDLER⇨REV.
2) When changing the mode in the REV···⇨EJECT direction, press the left side (⇦) of the mode selector key until the desired mode is indicated.
3) In the mid position of each mode during a shift to other mode, the "BLANK" LED lights. But the "PLAY", "IDLER", "REV" LEDs light between the EJECT mode and the INITIAL mode. Be sure therefore to check the mechanism body to see just what state the mechanism is in.
   Incidentally, if the mode selector is not connected to the mechanism, the "BLANK" LED lights to indicate the power ON.
4) The SLOW position of POWER switch makes relatively slow motions in comparison with the NORMAL position.

Note 1 : The mode selector drives the loading motor only, not affecting the head drum motor and the capstan motor. When using the mode selector with a cassette loaded, turn the capstan motor manually to remove tape slackness, preventing tape entanglement.

Note 2 : If the left side (⇦) of the mode selector (VHJ-0050) key is kept pressed with the COMPL cassette mechanism removed, it might get past the EJECT position, causing the front helical gear and the front worm gear to get disengaged.

In this condition, since the front helical gear will not turn even if the right side (⇨) of the mode selector key is pressed, rotate (push) the front helical gear clockwise by hand and engage it with the front worm gear. In this condition, as there is a misalignment between the mechanism main body operation mode (indicated by the mode selector indicator lamps) and the front loading mechanism operation mode, keep the right side (⇨) of the mode selector key pressed until the front helical gear and the front loading gear of the front loading mechanism get back to the initial condition (Refer to A and B in Fig. 4-5-5 of section 4-5-2. Loading Motor).

When the front loading mechanism returns to the initial condition, operation mode of the whole mechanism gets back to normal, matching the mode shown by the mode selector indicator lamps (mode is not properly indicated, however, during EJECT to INITIAL).

Sometimes, engagement of the front helical gear with the front worm gear is delayed, operation mode of the mechanism main body gets too much ahead and the front loading mechanism mode cannot be switched to the initial condition. In that case, press the left side (⇦) of the mode selector key, setting the mechanism main body operation mode back to EJECT (rotation of the mode cam and the MAIN CAM stops).

Note 3 : The mode selector indicator lamps show the mechanism operation mode, but the EJECT lamp may sometimes fail to indicate the actual mechanism operation mode.

Published in Heiloo, Holland.

www.freeservicemanuals.info 11/15/15

Digitized by WWW.FREESERVICEMANUALS.INFO

5. MECHANISM DISMANTLING AND REASSEMBLING

5-1. MECHANISM MAIN UNIT (See Fig. 5-1-1.)

Removal

1) Remove the connectors of the COMPL MC-3 and the COMPL HEAD BRACKET.
2) Remove the flexible cable ① connecting the COMPL CYLINDER to the PRE-AMP UNIT ③ (See Fig. A).
3) Remove the two screws ②, then remove the PRE-AMP UNIT ③.
4) Remove the screw ④, then remove the PRE-AMP. BRACKET ⑤.
5) Remove the two screws ⑥.
6) Remove the three screws ⑦ and two screws ⑩, then lift up the mechanism main unit and remove it.

   Since the TRAY ⑧ obstructs removal of the two front screws ⑩, move the TRAY LOCK LEVER ⑨ in the direction of the arrow to unlock, then slide the TRAY ⑧ before removing the screws. (See Fig. B)

Note : Shape of the PRE-AMP UNIT ③ and the PRE-AMP. BRACKET ⑤ differ depending on the model.

2. Remounting

1) Mount the mechanism main unit onto the chassis with the three screws ⑦ and two screws ⑩.
2) Tighten the two screws ⑥.
3) Mount the PRE-AMP. BRACKET ⑤ with the two screws ④.
4) Mount the PRE-AMP UNIT ③ and the ground lug with the two screws ② (some models are not provided with a ground lug).
5) Insert the flexible cable ① into the connector of the PRE-AMP UNIT.
6) Connect the connectors of COMPL MC-3 and COMPL HEAD BRACKET.

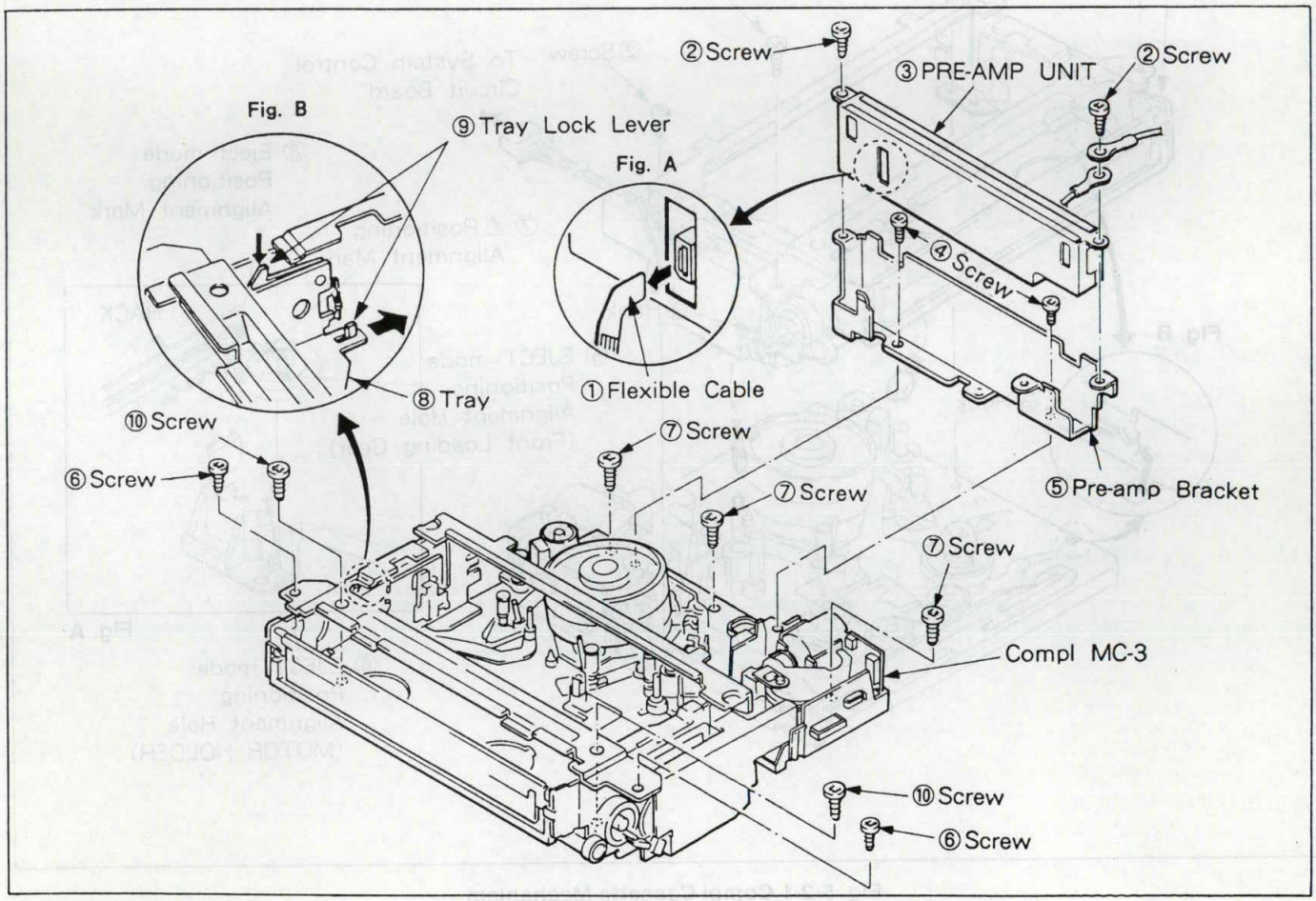

Fig. 5-1-1 Mecahnism Main Unit

Published in Heiloo, Holland.

www.freeservicemanuals.info 11/15/15

Digitized by WWW.FREESERVICEMANUALS.INFO

5-2. CASSETTE HOLDER MECHANISM

5-2-1. COMPL Cassette Mechanism (See Fig. 5-2-1.)

1. Removal

1) Set the video main unit to the EJECT completed mode.
2) Pull out the connectors (6-PIN CONNECTOR connected to the system control circuit board, ACE HEAD CONNECTOR, and FTE HEAD CONNECTOR) from CASSETTE HOLDER.
3) Remove the two screws ①.
4) Remove the two screws ②.
5) Lift up the COMPL CASSETTE MECHANISM ④ back a little and remove the two hooks ③ on the front (See Fig. B). When doing so, make sure that the SAFETY SWITCH LEVER is not caught by the mechanism chassis.

2. Remounting

1) Set the chassis section mechanism to the EJECT mode with the mode selector (VHJ-0050) (looking from above, match the front loading gear hole ⑤ with the MOTOR HOLDER hole ⑥ as shown in Fig. A).
2) Set the COMPL CASSETTE MECHANISM ④ to the EJECT completed mode.
3) Mount the COMPL CASSETTE MECHANISM ④ onto the mechanism chassis, aligning it with the protuberance.
   Match positions of the FRONT LOADING GEAR △ mark ⑦ and the RACK EJECT mark ⑧. (See Fig. A.)
4) Fix to the mechanism chassis with the two screws ②.
5) Fix to the chassis with the screw ①.
6) Connect to the various connectors.

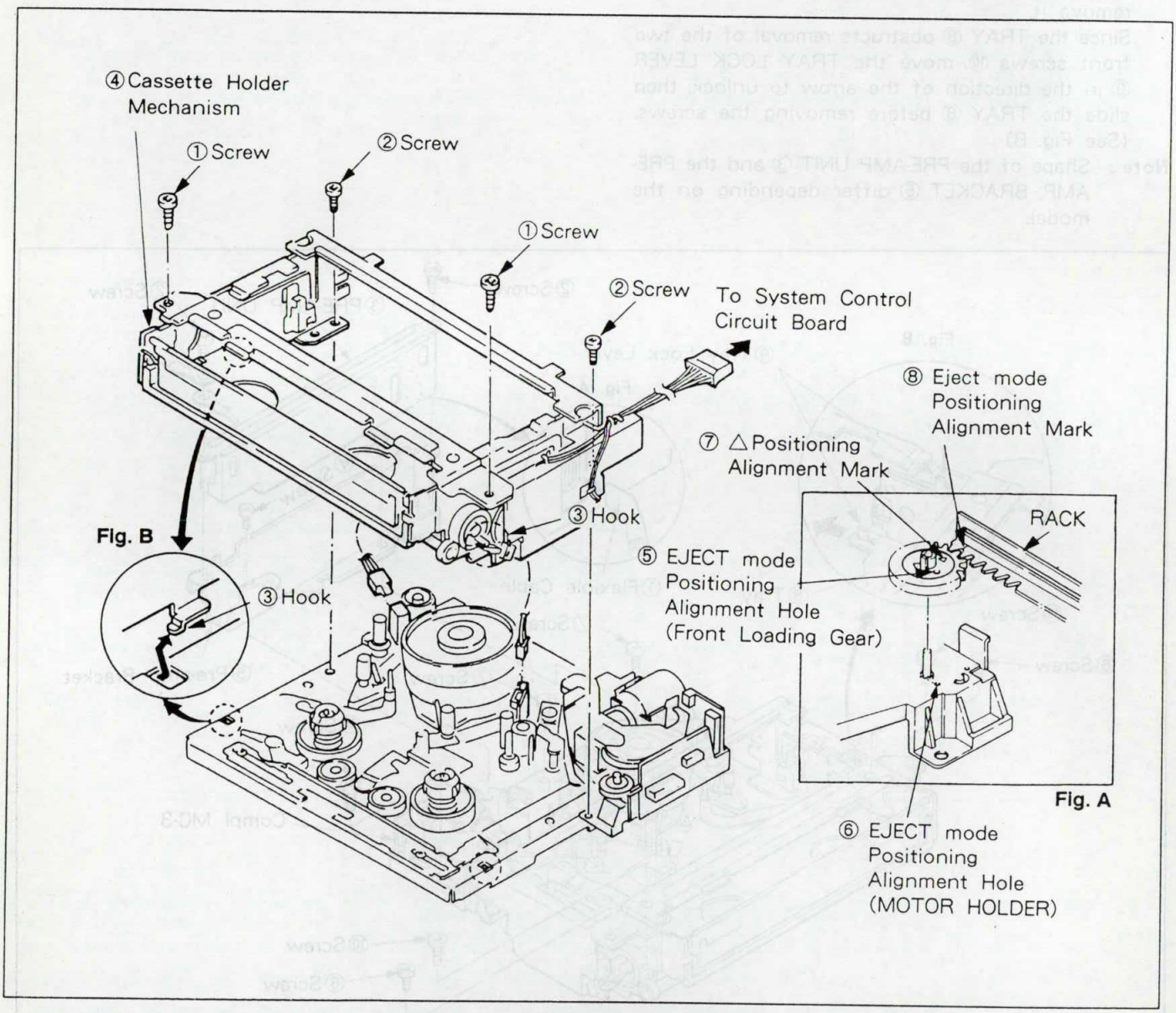

Fig. 5-2-1 Compl Cassette Mechanism

Published in Heiloo, Holland.

www.freeservicemanuals.info 11/15/15

Digitized by WWW.FREESERVICEMANUALS.INFO

5-2-2. Gear Bracket Ass'y (See Fig. 5-2-2.)

1. Removal

1) Remove the COMPL CASSETTE MECHANISM as instructed in 5-2-1.
2) Remove the three screws ①, then remove the GEAR BRACKET ASS'Y ② as shown in Fig. A.
3) Remove the E ring ③, then remove the LOCK GEAR ④, the PINION LEVER ASS'Y ⑤, the PINION GEAR ⑥ and the RACK ⑦, in that order.

2. Remounting

1) Apply grease to the shaft ⑧ and the two pins ⑨ of the GEAR BRACKET ASS'Y.
2) Apply grease to the pin ⑩ of the PINION LEVER ASS'Y.
3) Apply grease to the toothed part of the RACK ⑦.
4) Fit the RACK ⑦ onto the two pins ⑨. Align the positioning alignment hole ⑪ to the positioning alignment hole ⑫ of the GEAR BRACKET.
5) Mount the PINION GEAR ⑥, PINION LEVER ASS'Y ⑤, and LOCK GEAR ④ in the shaft ⑧ in the order mentioned.
   Align the positioning alignment holes ⑬ of PINION GEAR and LOCK GEAR with the positioning alignment hole ⑪ of RACK at that time.
6) Mount the E ring ③ onto the shaft ⑧.
7) Set the GEAR BRACKET ASS'Y ② to the dowel and mount it using three screws ①.
   Align the positioning alignment hole Ⓐ of the IDLER GEAR with the positioning alignment hole Ⓑ of the SIDE BOARD as shown in Fig. 5-2-3 at this time.
   Also align the positioning alignment holes ⑬ of PINION GEAR and LOCK GEAR with the positioning alignment hole ⑫ of GEAR BRACKET by referring to Fig. 5-2-2. After mounting them, check to be sure that FL START SWITCH ⑭ is in the ON state shown in Fig. A.
8) Remount the COMPL CASSETTE MECHANISM as instructed in 5-2-1.

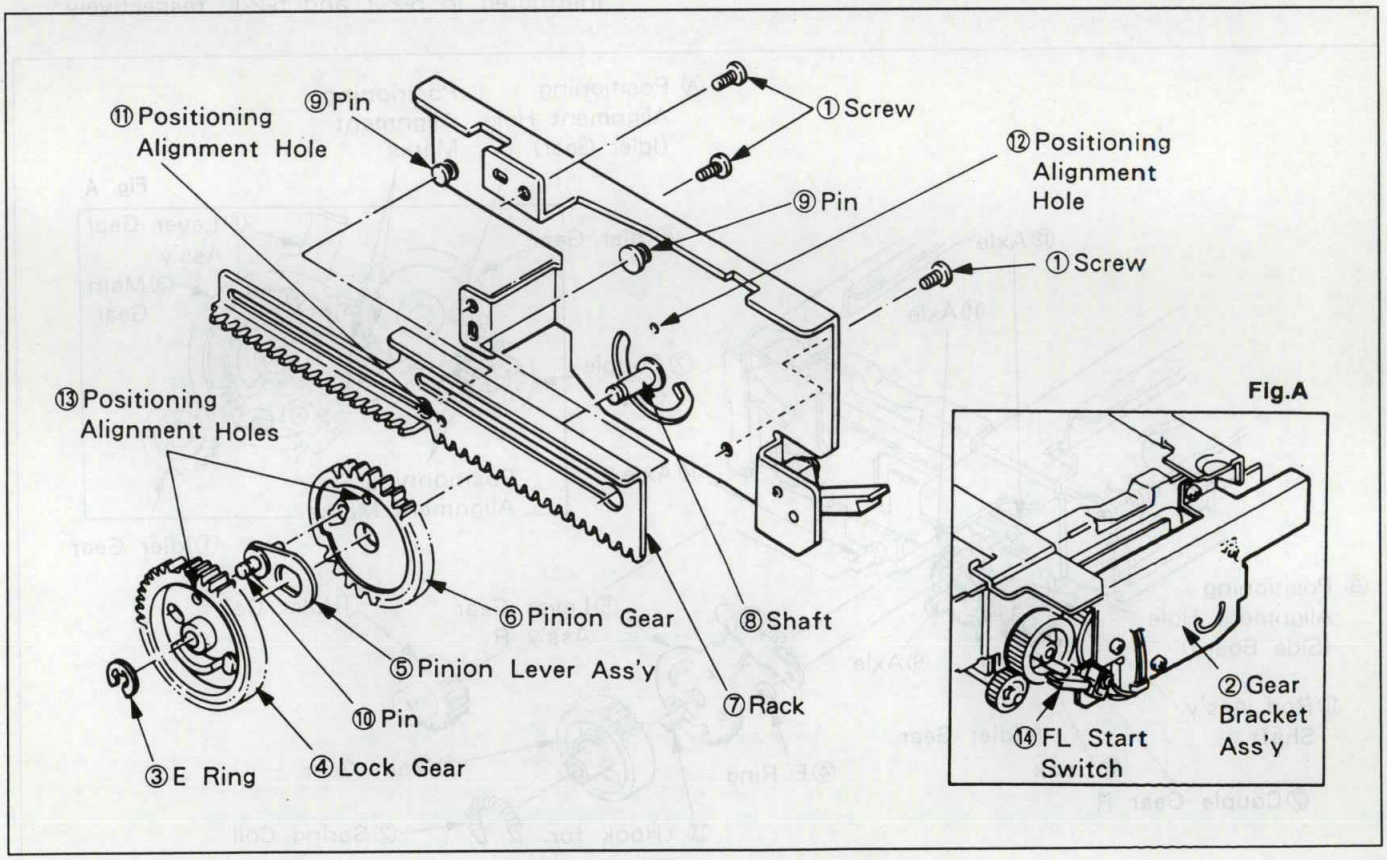

Fig. 5-2-2. Gear Bracket Ass'y

Published in Heiloo, Holland.

www.freeservicemanuals.info 11/15/15

Digitized by WWW.FREESERVICEMANUALS.INFO

5-2-3. Cassette Drive Gear (Right) (See Fig. 5-2-3.)

1. Removal

1) Remove the COMPL CASSETTE MECHANISM and the GEAR BRACKET ASS'Y as instructed in 5-2-1. and 5-2-2., respectively.
2) Remove the IDLER GEAR ①.
3) Remove the SPRING COIL ②, then remove the MAIN GEAR ③.
4) Remove the E ring ④, then remove the LEVER GEAR ASS'Y R ⑤.
5) Open the hook ⑥ and remove the COUPLE GEAR R ⑦. Take care not to open the hook ⑥ too much, otherwise it may get deformed or broken. If it does, replace it.
6) Remove the IDLER GEAR R ⑧.

2. Remounting

1) Apply grease to gear parts that undergo friction.
2) Mount the IDLER GEAR R ⑧ onto the axle ⑨.
3) Mount the COUPLE GEAR R ⑦ onto the ROD ASS'Y axle ⑩. When doing so, match the couple gear position with the IDLER GEAR R ⑧ as shown in Fig. A.
4) Mount the LEVER GEAR ASS'Y R ⑤ onto the axles ⑪ and ⑫. Match position to the IDLER GEAR R ⑧ as shown in Fig. A.
5) Mount the E ring ④ onto the axle ⑫.
6) Mount the MAIN GEAR ③ onto the axle ⑪. When doing so, match position to the IDLER GEAR R ⑧ as shown in Fig. A.
7) Hook the SPRING COIL ② to the notch ⑬ in the MAIN GEAR R ③ and the LEVER GEAR ASS'Y R.
8) Mount the IDLER GEAR ① onto the axle ⑭. When doing so, match position to the MAIN GEAR as shown in Fig. A.
9) Mount the GEAR BRACKET ASS'Y and the COMPL CASSETTE MECHANISM ASS'Y as instructed in 5-2-2. and 5-2-1., respectively.

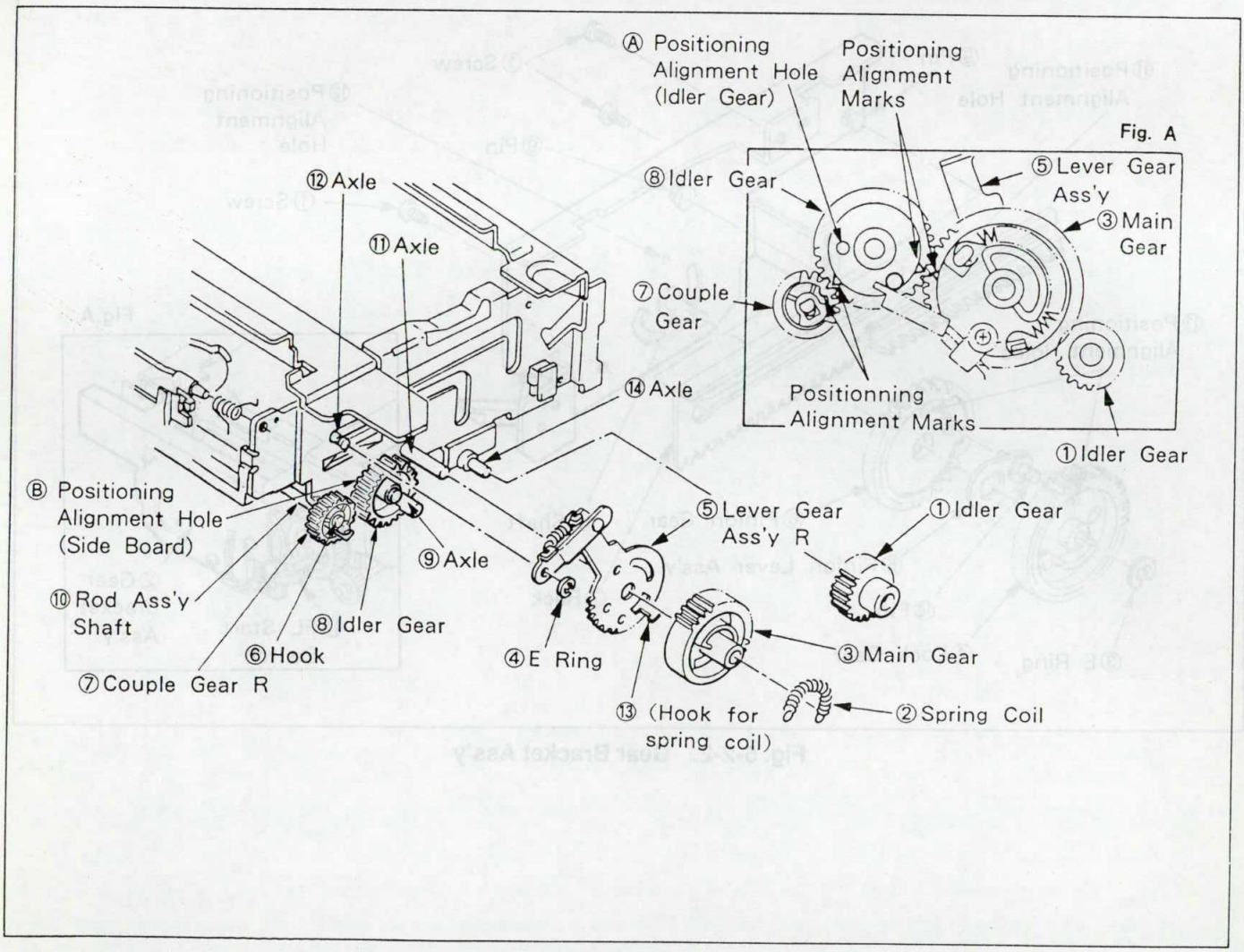

Fig. 5-2-3. Cassette Drive Gears (Right Side)

Published in Heiloo, Holland.

www.freeservicemanuals.info 11/15/15

Digitized by WWW.FREESERVICEMANUALS.INFO

5-2-4. Cassette Drive Gear (Left) (See Fig. 5-2-4)

1. Removal

1) Remove the COMPL CASSETTE MECHANISM as instructed in 5-2-1.
2) Remove the E ring ②.
3) Open the hook ③, then remove the LEVER GEAR ASS'Y L ④. Take care not to open the hook ③ too much, otherwise it may get deformed or broken. If it does, replace it.
4) Remove the SPRING COIL ⑤ from the LEVER GEAR ASS'Y L ④.

2. Remounting

1) Apply grease to the axle ⑨ and shaft ⑩.
2) Align with the COUPLE GEAR L ⑬ and the IDLER GEAR L ⑥ as shown in Fig B.
3) Hook the SPRING COIL ⑤ to the LEVER GEAR ASS'Y L ④.
4) Mount the LEVER GEAR ASS'Y L ④ onto the axle ⑨ and the shaft ⑩. Align with the IDLER GEAR L ⑥ as shown in Fig. B.
5) Mount the COMPL CASSETTE MECHANISM onto the chassis as instructed in 5-2-1.

Note: The end of the DOOR OPEN LEVER ⑦ leans against the front side of the CASSETTE DOOR ⑪ as shown in Fig. A.

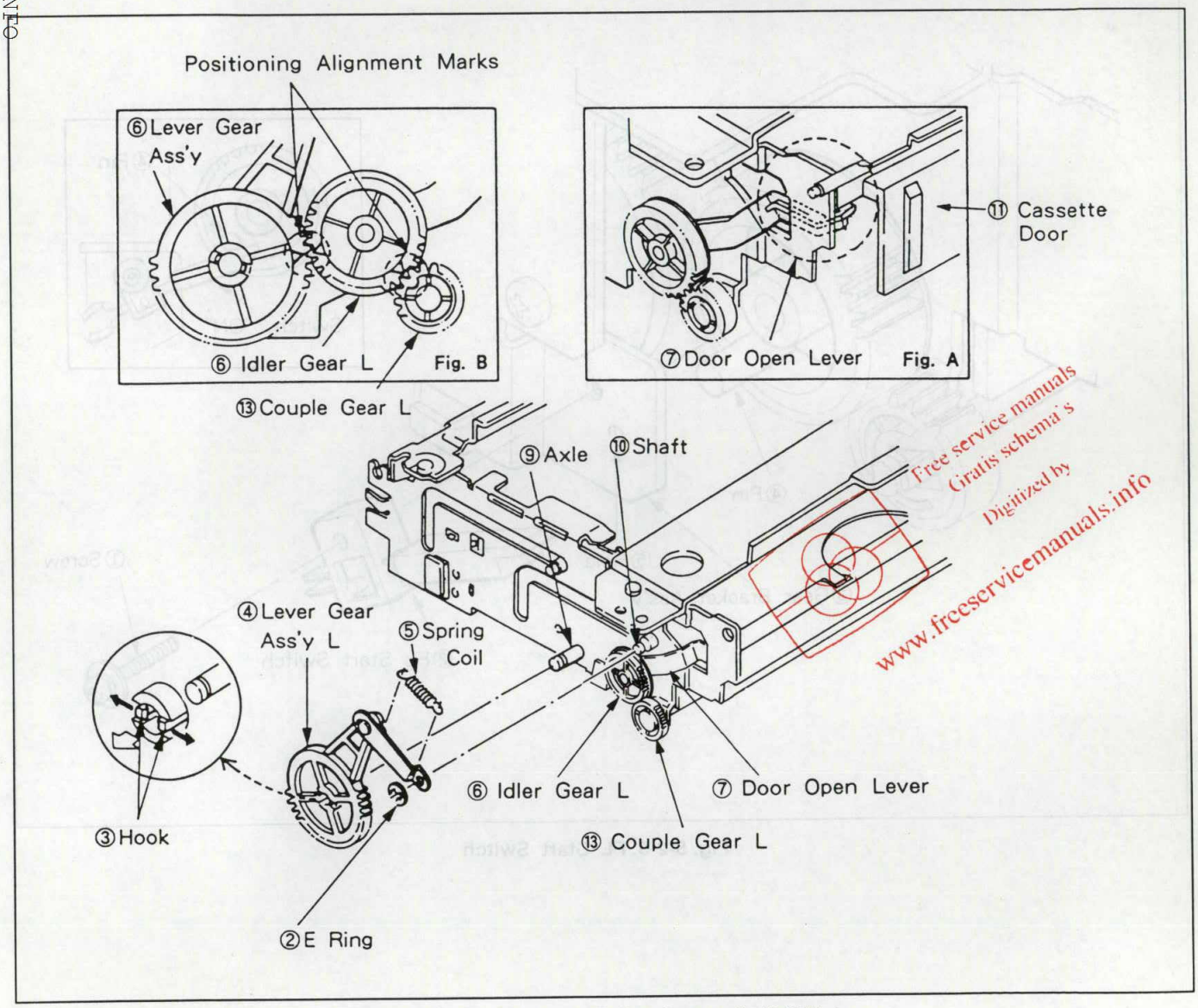

Fig. 5-2-4. Cassette Drive Gears (Left Side)

Free service manuals Gratis schema's Digitized by www.freeservicemanuals.info

Published in Heiloo, Holland.

www.freeservicemanuals.info 11/15/15

Digitized by WWW.FREESERVICEMANUALS.INFO

5-2-5. FL Start Switch (See Fig. 5-2-5.)

1. Removal

1) Remove the COMPL CASSETTE MECHANISM as instructed in 5-2-1.
2) Remove the screw ①.
3) Remove the lead wire of the FL START SWITCH ②.

2. Remounting

1) Solder the lead wire to the FL START SWITCH ② terminal.
2) Align the FL START SWITCH ② protuberance to the hole ⑤, then mount it onto the GEAR BRACKET ASS'Y ③ with the screw ①. Do it so that the FL START SWITCH ② is turned ON by holding the pin ④ of IDLER GEAR in the EJECT completed mode.
3) Mount the COMPL CASSETTE MECHANISM as instructed in 5-2-1.

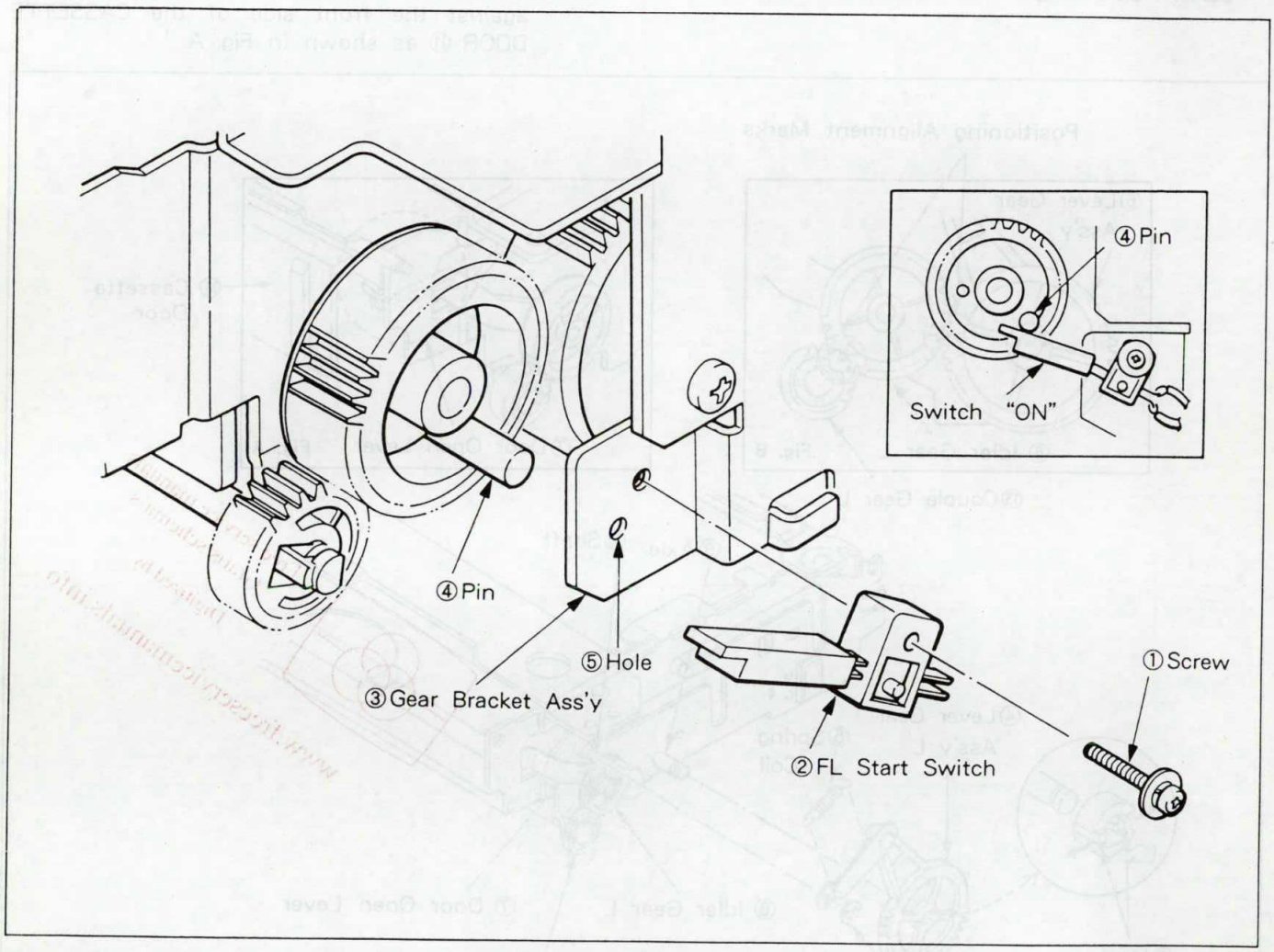

Fig. 5-2-5. FL Start Switch

Published in Heiloo, Holland.

www.freeservicemanuals.info 11/15/15

Digitized by WWW.FREESERVICEMANUALS.INFO

5-2-6. T-Top Sensor, T-End Sensor (See Fig. 5-2-6.)

Removal

1) Remove the COMPL CASSETTE MECHANISM as instructed in 5-2-1.
2) When removing the T-TOP SENSOR, remove the GEAR BRACKET ASS'Y as instructed in 5-2-2.
3) Unhook the hook ① as instructed in Fig. A, then remove the LID ②. Take care not to push the hook ① too much, otherwise it may be deformed or broken.
4) Remove the phototransistors ③, then remove the lead wire.

Note : Mounting position of the transistor holder on the T-END SENSOR side is precisely adjusted at the factory, so do never remove it from the COMPL CASSETTE MECHANISM.

2. Remounting

1) Solder the brown lead wire to the emitter side, and the red lead wire to the collector side of the T-TOP SENSOR phototransistor ③.
   Solder the orange lead wire to the emitter side, and the yellow lead wire to the collector side of the T-END SENSOR phototransistor.
2) Mount the phototransistors ③ onto their respective holders.
3) Mount the LID ② and fix it with the hook ①.
4) Mount the GEAR BRACKET ASS'Y as instructed in 5-2-2.
5) Mount the COMPL CASSETTE MECHANISM as insturcted in 5-2-1.

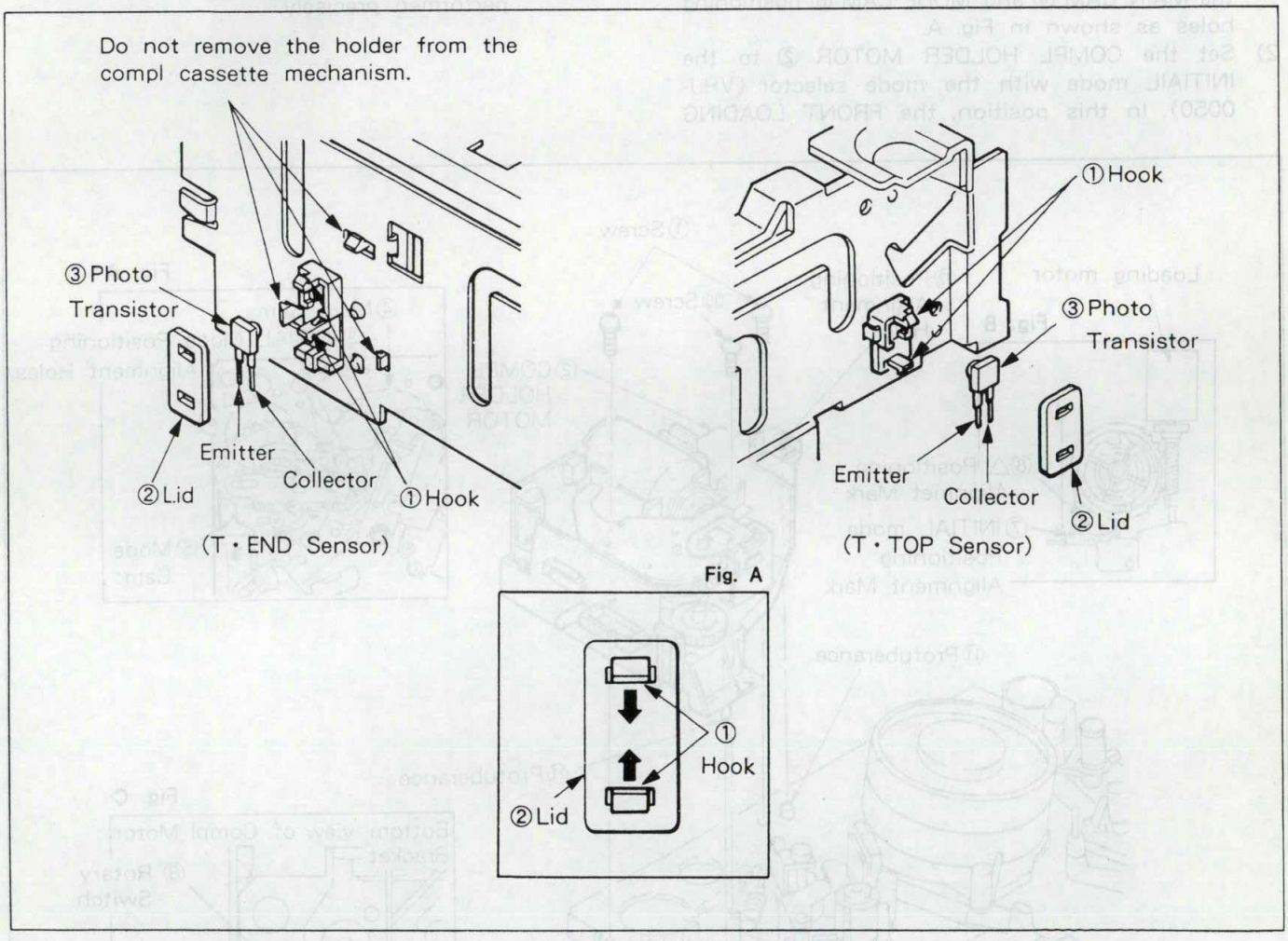

Fig. 5-2-6. T TOP Sensor & T END Sensor

Published in Heiloo, Holland.

www.freeservicemanuals.info 11/15/15

Digitized by WWW.FREESERVICEMANUALS.INFO

5-3. COMPL HOLDER MOTOR (LOADING MOTOR BLOCK)

5-3-1. COMPL Motor Bracket

1. Removal

1) Remove the PRE-AMP UNIT and the PRE-AMP. BRACKET as instructed in 5-1.
2) Remove the COMPL CASSETTE MECHANISM as instructed in 5-2-1.
3) Remove the two screws ① and the other one ⑩, then remove the COMPL HOLDER MOTOR ② (see Fig. 5-3-1.).

2. Remounting

1) Set the mechanism chassis to the INITIAL mode. In this mode, look at the mechanism chassis positioning holes ③ just from above and align the MAIN CAM ④ and MODE CAM ⑤ positioning holes as shown in Fig. A.
2) Set the COMPL HOLDER MOTOR ② to the INITIAIL mode with the mode selector (VHJ-0050). In this position, the FRONT LOADING GEAR △ mark ⑥ is aligned with the MOTOR HOLDER INITIAL mode position mark ⑦ (see Fig. B.).
3) Align the ROTARY SWITCH (mode detector switch) ⑧ with the INITIAL mode position mark ⑨ (see Fig. C.).
4) Align the COMPL HOLDER MOTOR main unit ② with the protuberance ⑪, then mount it with the two screws ① and the other one ⑩.
5) Mount the COMPL CASSETTE MECHANISM as instructed in 5-2-1.
6) Mount the PRE-AMP UNIT and the PRE-AMP. BRACKET as instructed in 5-1.

Note : Normal mechanism operation cannot be achieved if initial positioning of the MAIN CAM ④, the MODE CAM ⑤ and the ROTARY SWITCH (mode detector switch) ⑧ are not performed precisely.

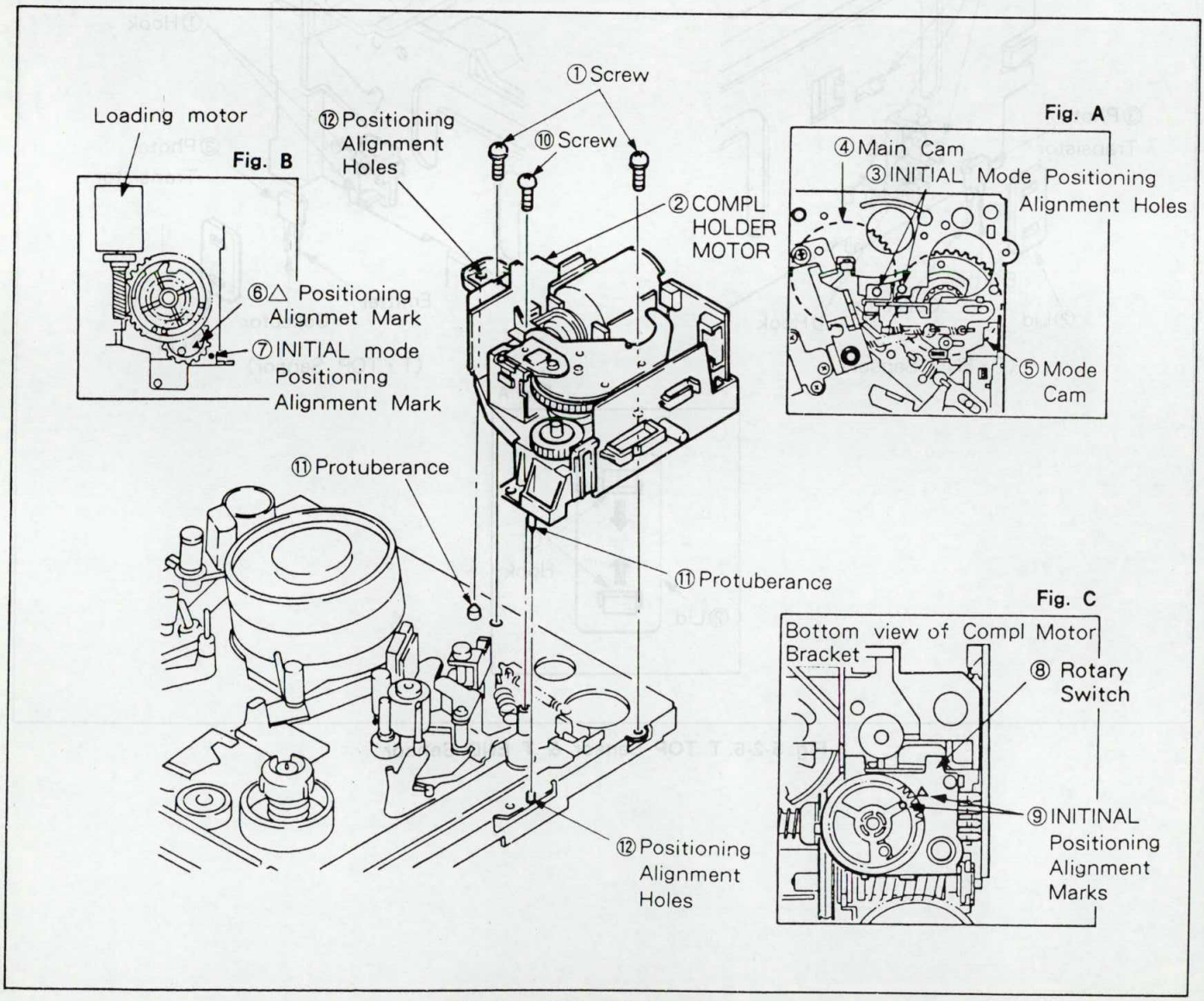

Fig. 5-3-1 Compl Holder Motor

Published in Heiloo, Holland.

www.freeservicemanuals.info 11/15/15

Digitized by WWW.FREESERVICEMANUALS.INFO

5-3-2. Loading Motor (Refer to Fig. 5-3-2.)

1. Removal

LOADING MOTOR can be replaced after LOADING MOTOR BLOCK unit has been removed by referring to 5-3-1. The 1990 version of the mechanism allows LOADING MOTOR itself to be replaced without removing CASSETTE HOLDER BLOCK and LOADING MOTOR BLOCK. The following describes this procedure.

1) Use MODE SELECTOR (VHJ-0050) to set the mechanism to the initial mode.
2) Remove the connector for DEW SENSOR connected to the MC-3 board ①.
3) Remove three screws ② and remove HOLDER BRACKET ④ with FRONT WORM ASS'Y ③ still attached.
4) Remove DAMPER ⑥ attached to the pulley of LOADING MOTOR ⑤.
5) Remove FRONT HELICAL GEAR ⑦ and WASHER ⑧.
6) Remove soldered LEAD WIRE from the terminal of LOADING MOTOR ⑤.
7) Remove LOADING BELT ⑨.
8) Remove LOADING MOTOR ⑤ by lifting up from the back terminal side.

2. Remounting

Before attaching LOADING MOTOR ⑤ to MOTOR BRACKET ASS'Y ⑩, confirm DAMPER ⑪ and DAMPER ⑫ shown in Fig. 5-3-5. are in the proper position on MOTOR BRACKET ASS'Y ⑩.

1) LOADING MOTOR ⑤ puts REAR SIDE BOSS ㉓ in the slit ㉔ of MOTOR HOLDER ⑩.
   Further, mount the tap hole ⑬ at two points of the front pulley side so that the it is secured to the PROTUBERANCE ⑭ of the MOTOR HOLDER at two points.
2) Solder the lead wire from the MC-3 board to LOADING MOTOR ⑤ terminal. (Solder the red lead wire to the positive terminal side.)
3) Hang LOADING BELT ⑨ on the pulley.
4) After hanging BELT ⑨ on the pulley, confirm that the mechanism unit is in the initial mode. The initial mode is indicated by Fig. A of Fig. 5-3-2., and is the position in which INITIAL POSITIONING ALIGNMENT HOLEs of MAIN CAM ⑮ and MODE CAM ⑯ are lined up with THROUGH HOLE ⑰ of MOTOR HOLDER. If the initial mode is not selected, adjust with MODE SELECTOR (VHJ-0050).
5) As shown in Fig. B, confirm the positions of the △ POSITIONING ALIGNMENT MARK on FRONT LOAD GEAR ⑱ and INITIAL MARK ⑲ position of MOTOR HOLDER and the position relationship of CASSETTE HOLDER RACK ⑳.
6) Apply a light coat of grease to the entire sides of AXLE ㉑ and FRONT HELICAL GEAR ⑦.
7) Attach FRONT HELICAL GEAR ⑦ and WASHER ⑧ to AXLE ㉑. As shown in Fig. C, FRONT HELICAL GEAR ⑦ is attached so that the indent on the side is inside PIN ㉒ of FRONT LEVER ASS'Y.
8) Attach DAMPER ⑥ to LOADING MOTOR ⑤ pulley.
9) HOLDER BRACKET ④ is attached by engaging FRONT WORM ASS'Y ③ with LOADING MOTOR ⑤ pulley, and held in place with three screws ②.
10) Attach the connector of DEW SENSOR ㉕ to the MC-3 board ① and return the mechanism to the eject completion using MODE SELECTOR.

Published in Heiloo, Holland.

www.freeservicemanuals.info 11/15/15

Digitized by WWW.FREESERVICEMANUALS.INFO

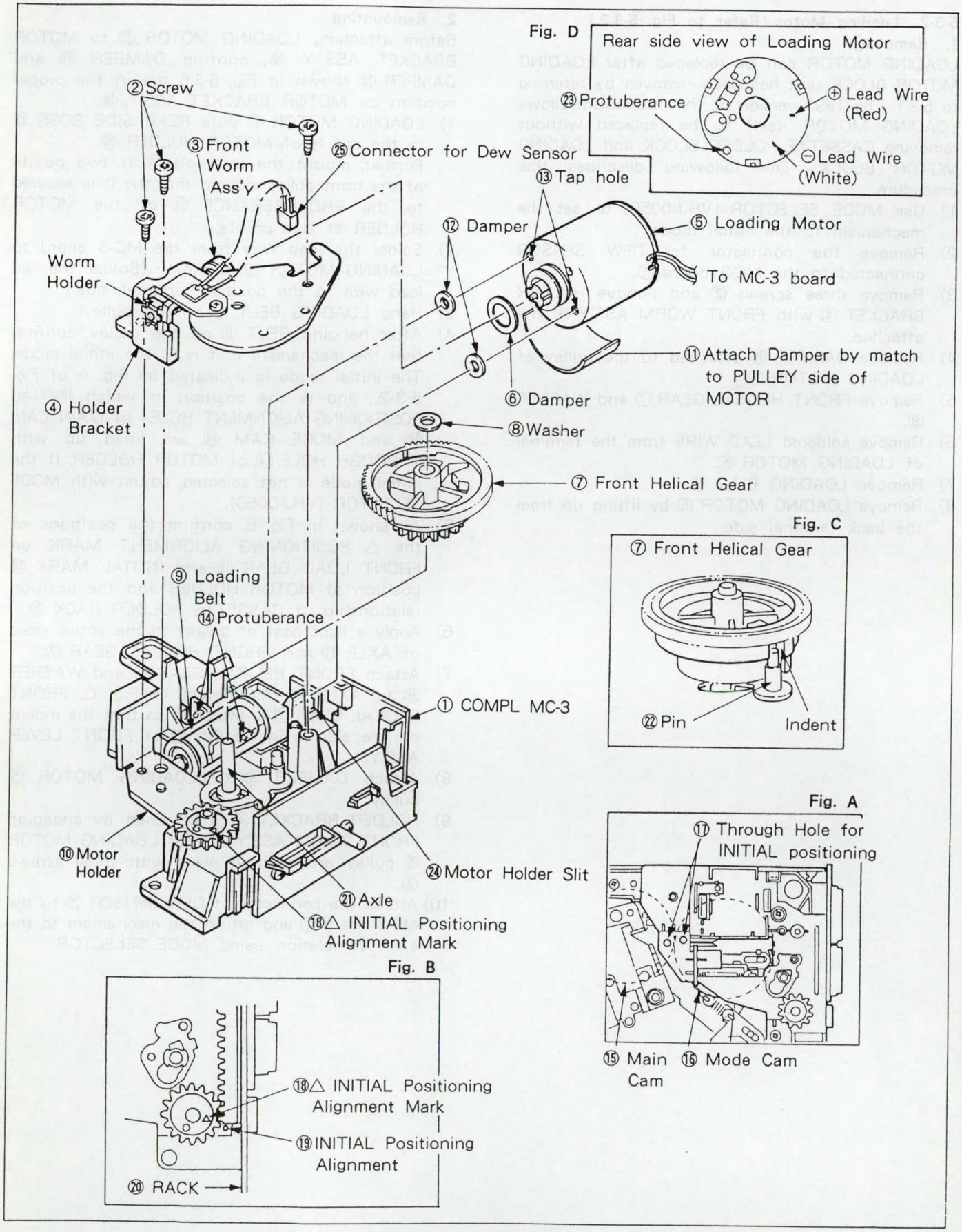

Fig. 5-3-2. Loading Motor

Published in Heiloo, Holland.

www.freeservicemanuals.info 11/15/15

Digitized by WWW.FREESERVICEMANUALS.INFO

5-4. TAPE LOADING MECHANISM

5-4-1. Main Parts of the Tape Loading Mechanism (See Fig. 5-4-1.)

1. Removal

1) Remove connectors from the DRUM MOTOR board (SV-5).
2) Remove the three screws ①, then remove the REINFORCE BRACKET ②.
3) Remove the three special washers ③ and ⑦, then remove the spacer ⑥, LOAD RACK ④ and MAIN CAM ⑧.
4) Unhook the LOAD GEAR T hook ⑩, then remove the LOAD GEAR T ⑨ as shown in Fig. A, with the SPRING COIL ⑪ and the LOAD LEVER ASS'Y T ⑫ attached to it.
5) Unhook the LOAD GEAR S hook ⑭, then remove the LOAD GEAR S ⑬ as shown in Fig. B, with the SPRING COIL ⑮ and the LOAD LEVER ASS'Y S ⑯ attached to it.

Note: Take care not to open the LOAD GEAR hooks too much, otherwise they may be deformed or broken. If they are, replace them.

2. Remounting

1) Apply grease to the hole ⑰ of the LOAD LEVER ASS'Y S ⑯, as shown in Fig. B.
2) Apply grease to the hole ㉒ of the LOAD LEVER ASS'Y T ⑫ as shown in Fig. A, and to the sections of the LOAD GEAR T ⑨ as indicated with an arrow in Fig. C.
3) Apply grease to GROOVE 1, GROOVE 2 and to the outer side of the MAIN CAM ⑧, shown in Fig. E.
4) Apply grease to the three oval holes of the LOAD RACK ④ as shown in Fig. D.
5) Apply grease to the outer surface of axles ⑲, ⑳ and ㉘.
6) After assembling as shown in Fig. B, mount the LOAD GEAR S ⑬ onto the axle ⑲. Insert the ROLLER BASE S pin ⑱ into the hole ⑰ of the LOAD LEVER ASS'Y S.
7) After assembling as shown in Fig. A, mount the LOAD GEAR T ⑨ onto the axle ⑳. When doing so, align the INITIAL mode positioning alignment holes ㉑ of the LOAD GEAR S ⑬ and the LOAD GEAR T ⑨ to the INITIAL mode position. Insert the ROLLER BASE T pin ㉓ into the hole ㉒ of the LOAD LEVER ASS'Y T ⑫.
8) Mount the MAIN CAM ⑧ onto the axle ㉖. At that time, make sure that the INITIAL mode positioning alignment holes ㉕ of the MAIN CAM ⑧ and the MODE CAM ㉔ match the INITIAL mode positioning alignment holes ㉞ of the MECHANISM CHASSIS. Also check to be sure that the pin ㉗ of the CAM PINCH LEVER ASS'Y is put in the GROOVE 1 of the MAIN CAM as shown in Fig. E.
9) Mount the LOAD RACK ④ onto the axles ㉖ and ㉛. At that time, set the INITIAL mode positioning alignment marks ㉚ of the LOAD RACK ④ and the LOAD GEAR T ⑨ to the INITIAL mode position. Insert the LOAD RACK pin ㉙ into the MAIN CAM GROOVE 2 as shown in Fig. E.
10) Mount the spacer ⑥ and the special washer ⑦ onto the axle ㉖.
11) Mount the two special washers ③ onto the two axles ㉛.
12) Mount the REINFORCE BRACKET ② with the three screws ①.
13) Insert the connector into the DRUM MOTOR board (SV-5).
14) Confirm that loading and unloading are performed smoothly.

Note: Be sure to perform INITIAL mode positioning of cams and gears precisely.

Published in Heiloo, Holland.

www.freeservicemanuals.info 11/15/15

Digitized by WWW.FREESERVICEMANUALS.INFO

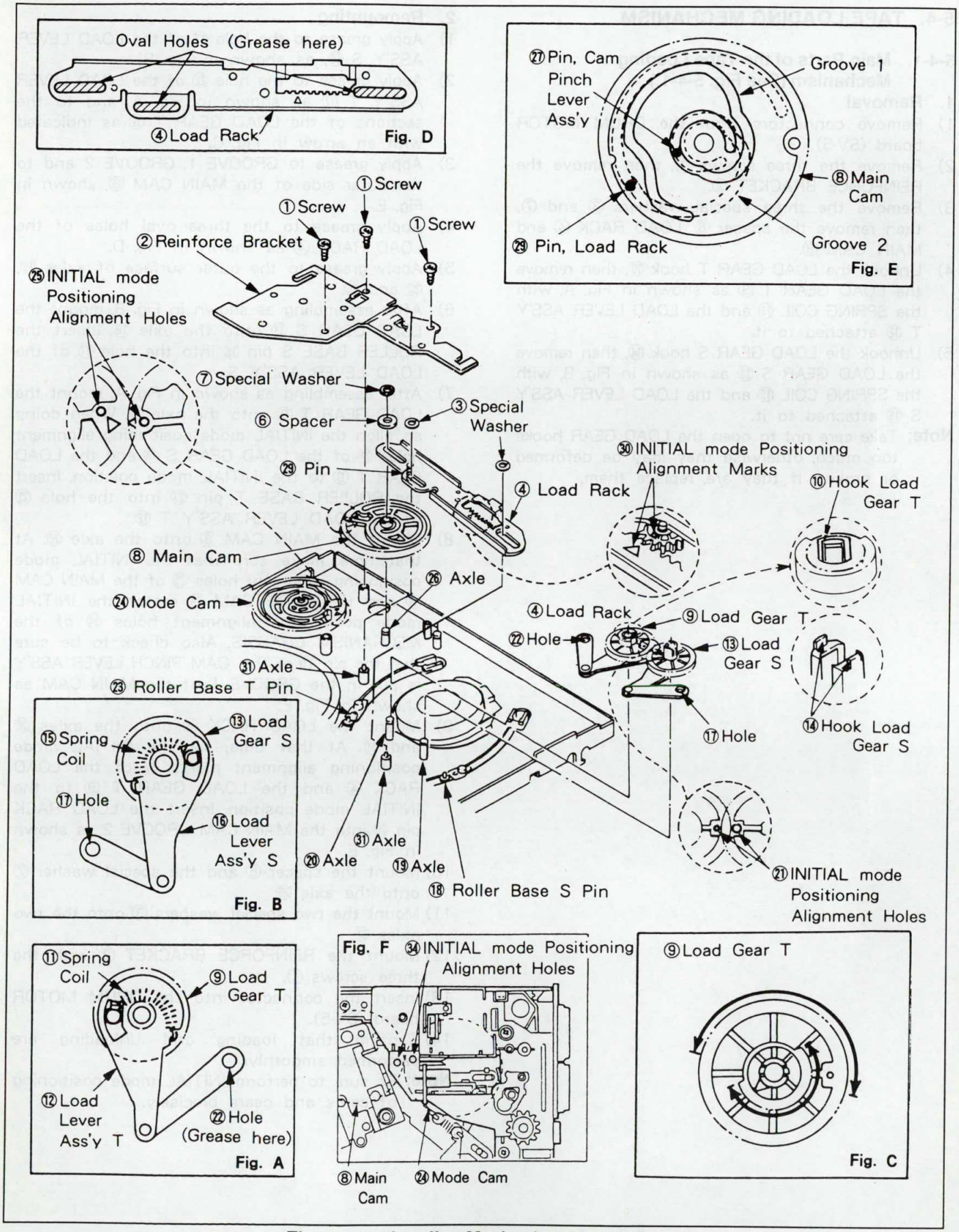

Fig. 5-4-1. Loading Mechanism Main Parts

Published in Heiloo, Holland.

www.freeservicemanuals.info 11/15/15

Digitized by WWW.FREESERVICEMANUALS.INFO

5-4-2. Mode Cam (See Fig. 5-4-2.)

1. Removal

1) Set the INITIAL mode with the mode selector (VHJ-0050).
2) Remove the REINFORCE BRACKET as instructed in 5-4-1.
3) Remove the two stop washers ①, then remove the CAM PLATE SLIDE ASS'Y ②.
4) Remove the MODE CAM ③.

Free service manuals Gratis schema's Digitized by www.freeservicemanuals.info

2. Remounting

1) Referring to 5-4-1., confirm that the MAIN CAM is in the INITIAL mode position.
2) In case the MAIN CAM is misplaced, use the mode selector (VHJ-0050) to align the MAIN CAM positioning hole with the chassis INITIAL mode position hole (refer to 5-4-1. for the INITIAL mode position). Since the ROTARY SWITCH (mode detector switch) does not rotate, the mode selector indicator lamp will not show the correct mode.
3) Align the ROTARY SWITCH (mode detector switch) ④ with the INITIAL mode position mark ⑤ as shown in Fig. A.
4) Mount the MODE CAM ③ onto the axle ⑥. Do it so that the SLIDE CAM ASS'Y pin ⑪ is placed in the GROOVE 3 as shown in Fig. B.
5) Mount the CAM PLATE SLIDE ASS'Y ② onto the axles ⑥ and ⑦. Do it so that the pin ⑧ gets into the GROOVE 4 of the MODE CAM as shown in Fig. B, and the point ⑨ of the bent-up part into the ACT PLATE SLIDE ASS'Y hole ⑩.
6) Mount the two special washers ① onto the axles ⑥ and ⑦.
7) Mount the REINFORCE BRACKET as instructed in 5-4-1.

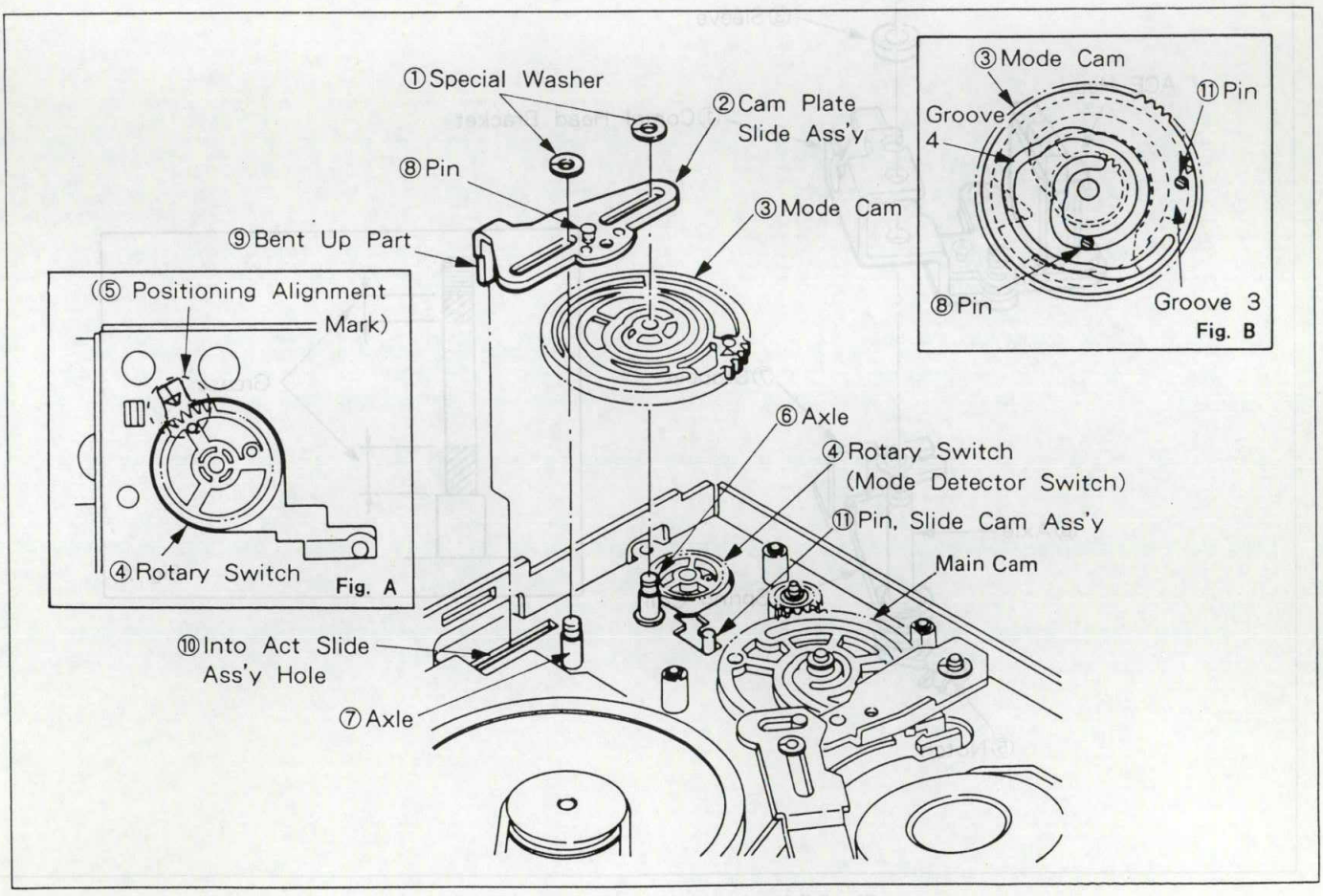

Fig. 5-4-2. Mode Cam

Published in Heiloo, Holland.

www.freeservicemanuals.info 11/15/15

Digitized by WWW.FREESERVICEMANUALS.INFO

5-5. COMPL HEAD BRACKET (ACE HEAD) (See Fig. 5-5-1.)

1. Removal

1) Remove the COMPL HEAD BRACKET special mounting nut ②.
2) Remove the SLEEVE ③, the COMPL HEAD BRACKET ① and the ACE HEAD SPRING COIL ④, in that order.

Note : Take care not to scratch or soil the ACE head surface.

2. Remounting

1) Apply grease to the axle ⑥ as shown in Fig. A.
2) Apply grease to the spot where the COMPL HEAD BRACKET ① makes contact with the STOPPER ⑦ (See Fig. A).
3) Mount the ACE HEAD SPRING COIL ④ and the COMPL HEAD BRACKET ①, in that order, onto the axle ⑥. Hook one end of the ACE HEAD SPRING COIL ④ to the notch ⑤, and the other end to the COMPL HEAD BRACKET, so that the COMPL HEAD BRACKET is pressed against the STOPPER ⑦ (See Fig. A).
4) Mount the SPECIAL NUT ② onto the axle ⑥ through the SLEEVE ③.
5) Clean the ACE head surface with a chamois leather moistened with methyl alcohol.
6) Perform ACE head adjustment as instructed in 6-4.

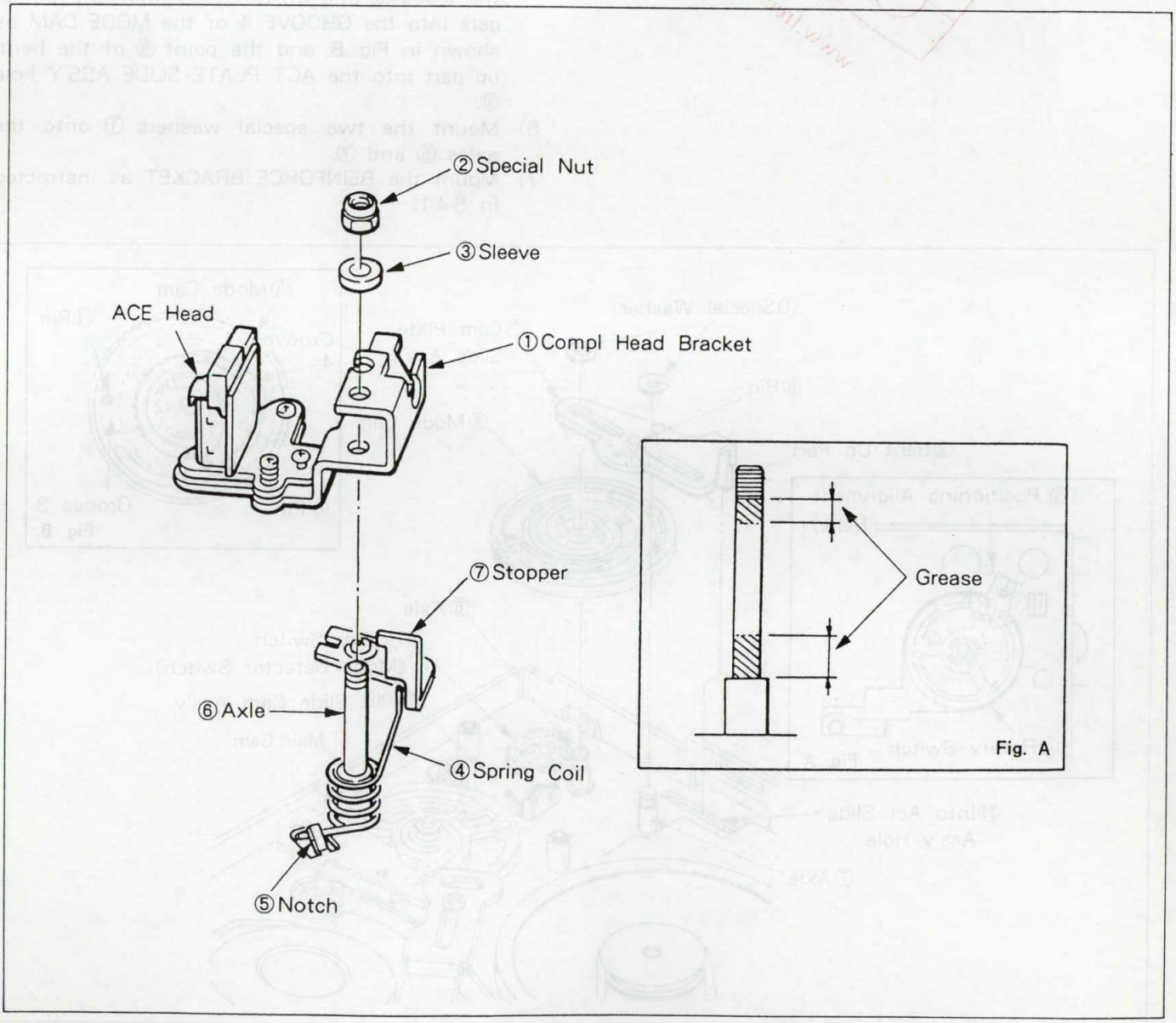

Fig. 5-5-1. Compl Head Bracket (ACE Head)

Published in Heiloo, Holland.

www.freeservicemanuals.info 11/15/15

Digitized by WWW.FREESERVICEMANUALS.INFO

5-6. PINCH ROLLER PRESSURE MECHANISM (See Fig. 5-6-1.)

1. Removal

1) Remove the COMPL CASSETTE MECHANISM as instructed in 5-2-1.
2) Remove the COMPL HEAD BRACKET as instructed in 5-5.
3) Remove the PINCH SPRING COIL ①.
4) Remove the special washer ②, then remove the PINCH LEVER ASS'Y ③.
5) Remove the REV GUIDE LEVER SPRING COIL ④.
6) Remove REV GUIDE LEVER ASS'Y ⑥ from the hook ⑤ of the plastic bearing on the bottom side. Use a jig VHJ-0073 shown in Fig. 5-6-2 to widen the hook of the plastic bearing. By so doing, the above removal of the REV GUIDE LEVER ASS'Y ⑥ can be made more easily. Care should be taken to avoid pushing the jig VHJ-0073 too much. Pushing it too hard may damage the hook in an extreme case.
7) Remove the SLIDE BRAKE SPRING COIL ⑦.
8) Remove the special washer ⑧, then remove the PINCH CAM LEVER ASS'Y ⑨.
9) Remove the ACT PINCH SLIDE ASS'Y ⑩.

Note: If the hook ⑤ of the plastic bearing is damaged, reference should be made to Section 3. "Method of Repairing the Bearing Section of REV GUIDE LEVER ASS'Y".

2. Remounting

1) Apply grease to pins ⑫/⑬ and axles ⑯/⑱.
2) Apply grease to the ACT PINCH SLIDE ASS'Y pin ⑰.
3) Set the INITIAL mode with the mode selector (VHJ-0050).
4) Mount the ACT PINCH SLIDE ASS'Y ⑩ onto pins ⑫ and ⑬.
5) Insert the pin ⑭ of the PINCH CAM LEVER ASS'Y ⑨ into the MAIN CAM ⑪ GROOVE 1, and mount onto the axle ⑯ while inserting the ACT PINCH SLIDE ASS'Y pin ⑰ of the ACT PINCH SLIDE ASS'Y into the hole ⑮.
6) Mount the special washer ⑧ onto the axle ⑯.
7) Hook the SLIDE BRAKE SPRING COIL ⑦ to the plastic pin ⑲.
8) Mount the REV GUIDE LEVER ASS'Y ⑥ to the plastic molding bearing, then fix it with the hook ⑤ at the bottom.
9) Hook the REV GUIDE LEVER SPRING COIL ④.
10) Mount the PINCH LEVER ASS'Y ③ to the axle ⑱.
11) Mount the special washer ② to the axle ⑱.
12) Hook the PINCH SPRING COIL ① between the ACT PINCH SLIDE ASS'Y ⑩ and the PINCH LEVER ASS'Y ③.
13) Mount the COMPL HEAD BRACKET as instructed in 5-5.
14) Mount the COMPL CASSETTE MECHANISM as instructed in 5-2-1.
15) Perform ACE head adjustment as instructed in 6-4.

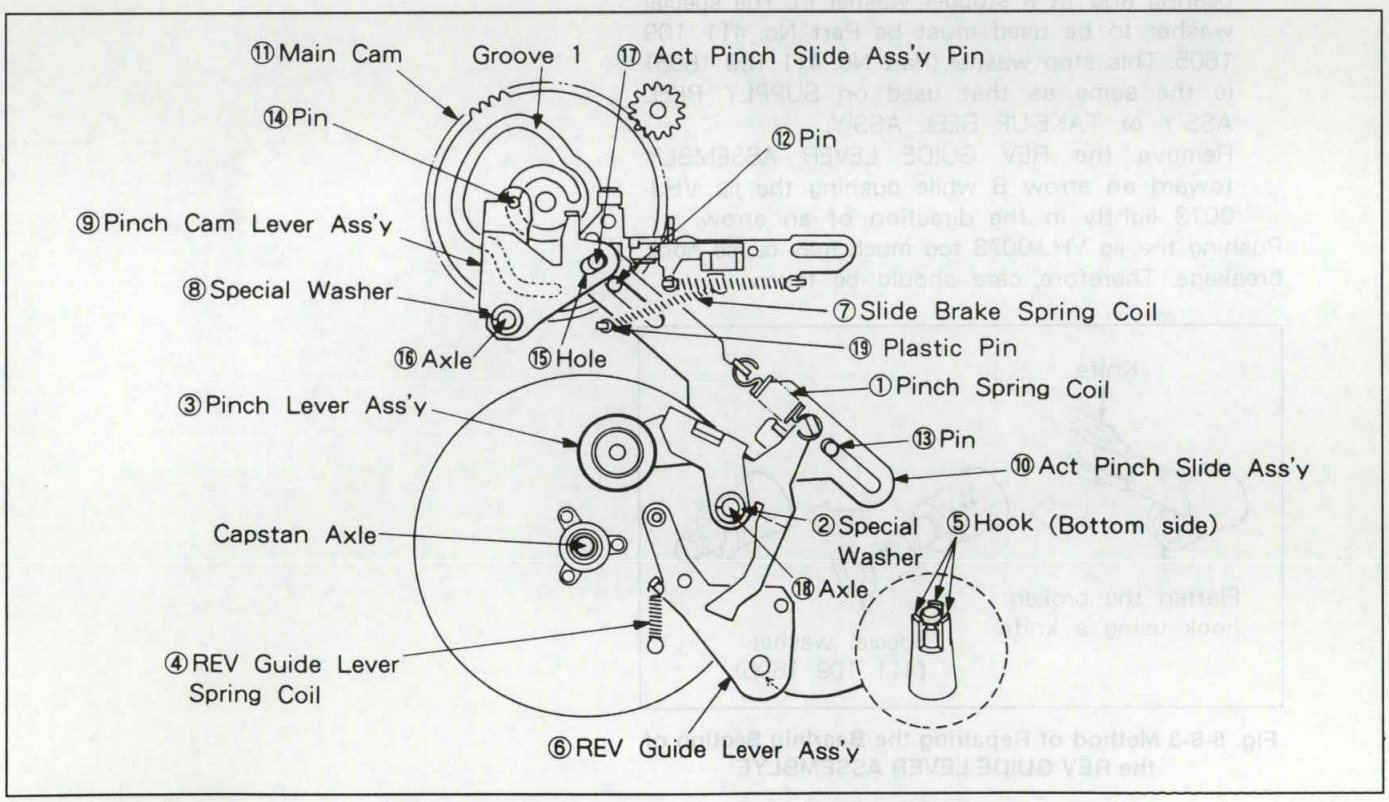

Fig. 5-6-1. Pinch Roller Pressure Mechanism

Published in Heiloo, Holland.

www.freeservicemanuals.info 11/15/15

Digitized by WWW.FREESERVICEMANUALS.INFO

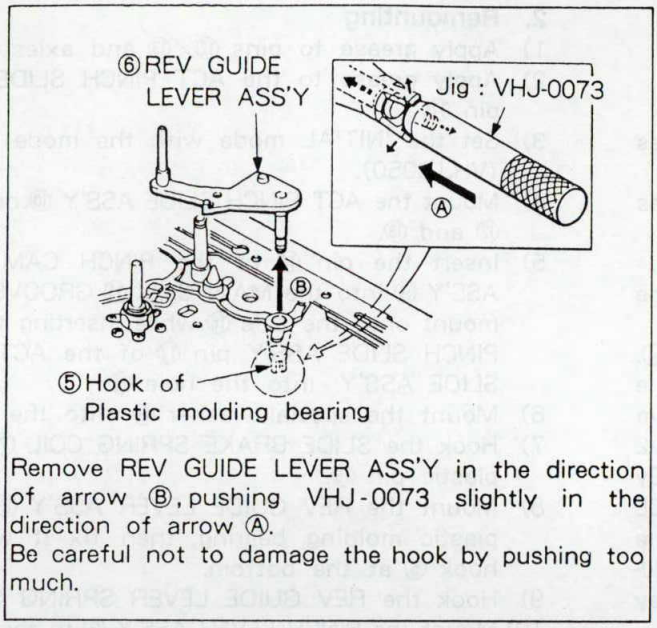

Remove REV GUIDE LEVER ASS'Y in the direction of arrow Ⓑ, pushing VHJ-0073 slightly in the direction of arrow Ⓐ.
Be careful not to damage the hook by pushing too much.

Fig. 5-6-2 Method of Using the Jig VHJ-0073

3. Method of Repairing the Bearing Section of REV GUIDE LEVER ASSEMBLY

If the hook of the plastic molding bearing is damaged in the process of removing the REV GUIDE LEVER ASS'Y, proceed with the repair as follows :

1) Scrape the broken hook of the bearing section with a cutter knife and flatten it.
2) Insert the REV GUIDE LEVER ASS'Y in the bearing and fit a stopper washer in. The special washer to be used must be Part No. 411 109 1605. This stop washer (Part No. 411 109 1605) is the same as that used on SUPPLY REEL ASS'Y or TAKE-UP REEL ASS'Y.
   Remove the REV GUIDE LEVER ASSEMBLY toward an arrow B while pushing the jig VHJ-0073 lightly in the direction of an arrow.

Pushing the jig VHJ-0073 too much may cause hook breakage. Therefore, care should be taken.

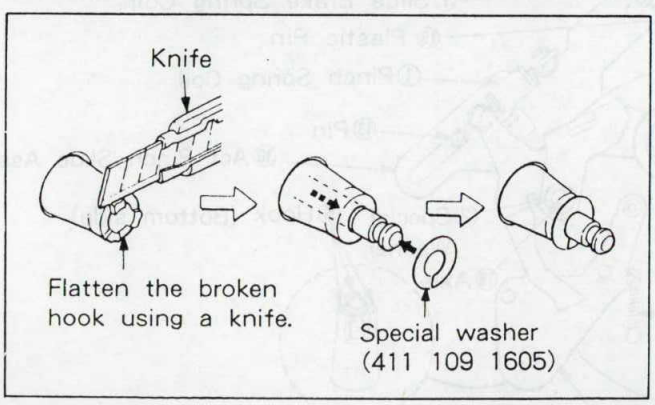

Fig. 5-6-3 Method of Repairing the Bearinig Section of the REV GUIDE LEVER ASSEMBLYE

Published in Heiloo, Holland.

www.freeservicemanuals.info 11/15/15

Digitized by WWW.FREESERVICEMANUALS.INFO

5-7. BRAKE MECHANISM

5-7-1. Sub Take-up Brake Ass'y (See Fig. 5-7-1.)

1. Removal

1) Remove the COMPL CASSETTE MECHANISM as instructed in 5-2-1.
2) Remove the SPRING COIL ①.
3) While pushing the hook ② in the direction of arrow, remove the SUB TAKE-UP BRAKE ASS'Y ③.

2. Remounting

1) Mount the SUB TAKE-UP BRAKE ASS'Y ③ onto the pin ④. Confirm that the hook ② is firmly hooked to the chassis.
2) Fit the SPRING COIL between hooks ⑤ and ⑥.
3) Mount the COMPL CASSETTE MECHANISM as instructed in 5-2-1.

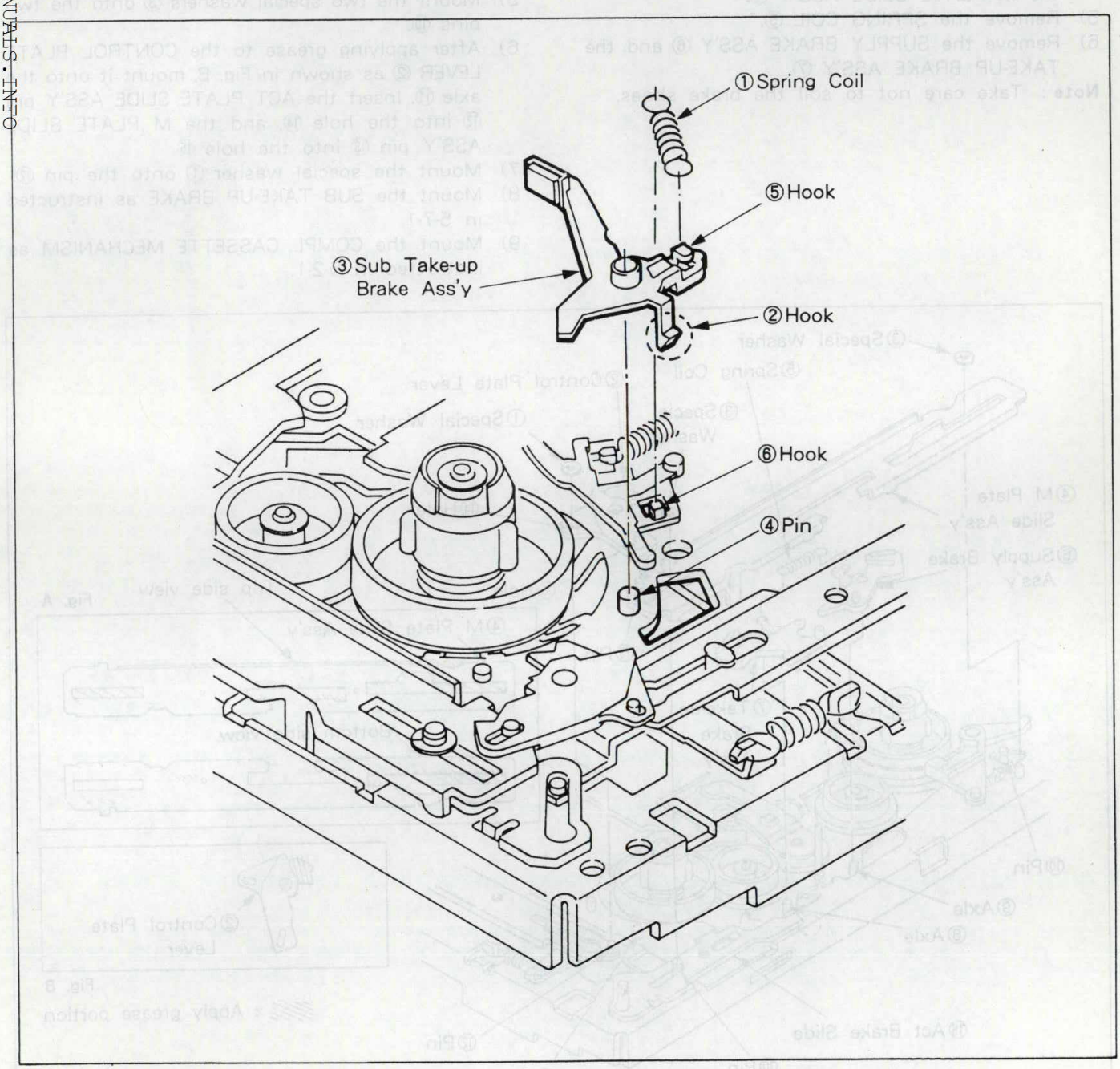

Fig. 5-7-1. Sub Take-up Brake Ass'y

Published in Heiloo, Holland.

www.freeservicemanuals.info 11/15/15

Digitized by WWW.FREESERVICEMANUALS.INFO

5-7-2. Supply Brake Ass'y and Take-up Brake Ass'y (See Fig. 5-7-2.)

1. Removal

1) Remove the COMPL CASSETTE MECHANISM as instructed in 5-2-1.
2) Remove the SUB TAKE-UP BRAKE as instructed in 5-7-1.
3) Remove the special washer ①, then remove the CONTROL PLATE LEVER ②.
4) Remove the two special washers ③, then remove the M PLATE SLIDE ASS'Y ④.
5) Remove the SPRING COIL ⑤.
6) Remove the SUPPLY BRAKE ASS'Y ⑥ and the TAKE-UP BRAKE ASS'Y ⑦.

Note : Take care not to soil the brake shoes.

2. Remounting

1) Apply a thin layer of grease to axles ⑧ and ⑨.
2) Mount the TAKE-UP BRAKE ASS'Y ⑦ onto the axle ⑧.
3) Mount the SUPPLY BRAKE ASS'Y ⑥ onto the axle ⑨.
4) After applying a thin layer of grease to the M PLATE SLIDE ASS'Y ④ as shown in Fig. A, mount it onto the two pins ⑩.
5) Mount the two special washers ③ onto the two pins ⑩.
6) After applying grease to the CONTROL PLATE LEVER ② as shown in Fig. B, mount it onto the axle ⑪. Insert the ACT PLATE SLIDE ASS'Y pin ⑫ into the hole ⑭, and the M PLATE SLIDE ASS'Y pin ⑬ into the hole ⑮.
7) Mount the special washer ① onto the pin ⑫.
8) Mount the SUB TAKE-UP BRAKE as instructed in 5-7-1.
9) Mount the COMPL CASSETTE MECHANISM as instructed in 5-2-1.

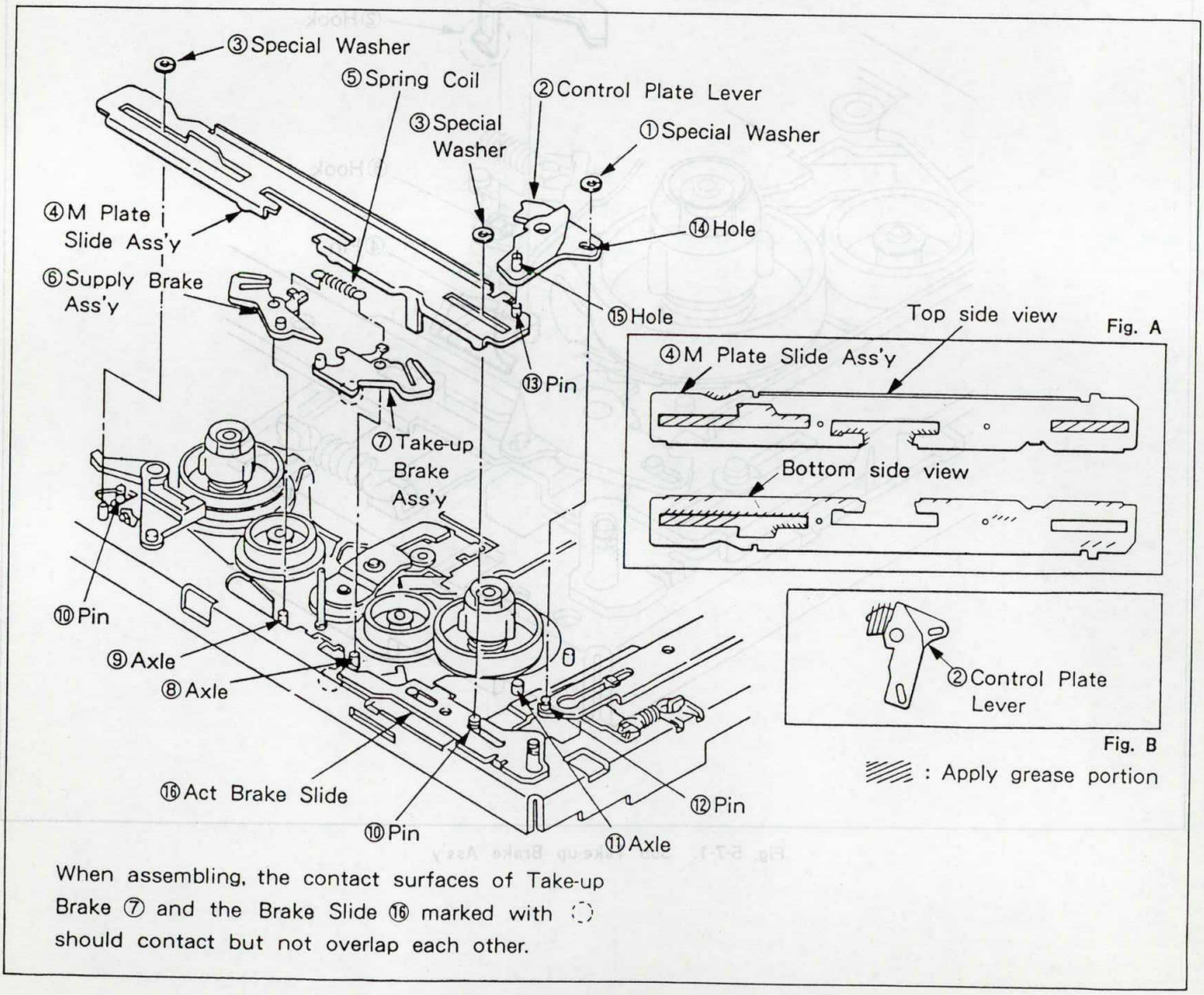

When assembling, the contact surfaces of Take-up Brake ⑦ and the Brake Slide ⑯ marked with ◌ should contact but not overlap each other.

Fig. 5-7-2. Supply Brake Ass'y & Take-up Brake Ass'y

Published in Heiloo, Holland.

www.freeservicemanuals.info 11/15/15

Digitized by WWW.FREESERVICEMANUALS.INFO

5-7-3. Tension Lever Ass'y and Band Holder Ass'y (See Fig. 5-7-3.)

1. Removal

1) Remove the COMPL CASSETTE MECHANISM as instructed in 5-2-1.
2) Remove the SPRING COIL ①.
3) Remove the screw ③ fixing the BAND HOLDER ASS'Y ②.
4) Push the SUB SUPPLY BRAKE ④ in the direction of the arrow A, setting the BAND HOLDER ASS'Y ② free.
5) Open the hook ⑤ a little and remove the TENSION LEVER ASS'Y ⑥. Take care not to open the hook ⑤ too much, otherwise it may be deformed or broken.
6) Remove the hook ⑦ of the BAND HOLDER ASS'Y.

2. Remounting

1) Mount the BAND HOLDER ASS'Y hook ⑦ into the TENSION LEVER ASS'Y hole ⑧.
2) Insert the TENSION LEVER ASS'Y axle ⑨ into the hole ⑩ and confirm that the hook ⑤ is hooked.
3) While pushing the SUB SUPPLY BRAKE ④ in the direction of arrow A, mount the BAND HOLDER ASS'Y ② with the screw ③.
4) Hook the SPRING COIL ① between the hooks ⑪ and ⑫.
5) Perform TENSION POLE position adjustment as instructed in 6-3.
6) Mount the COMPL CASSETTE MECHANISM as instructed in 5-2-1.

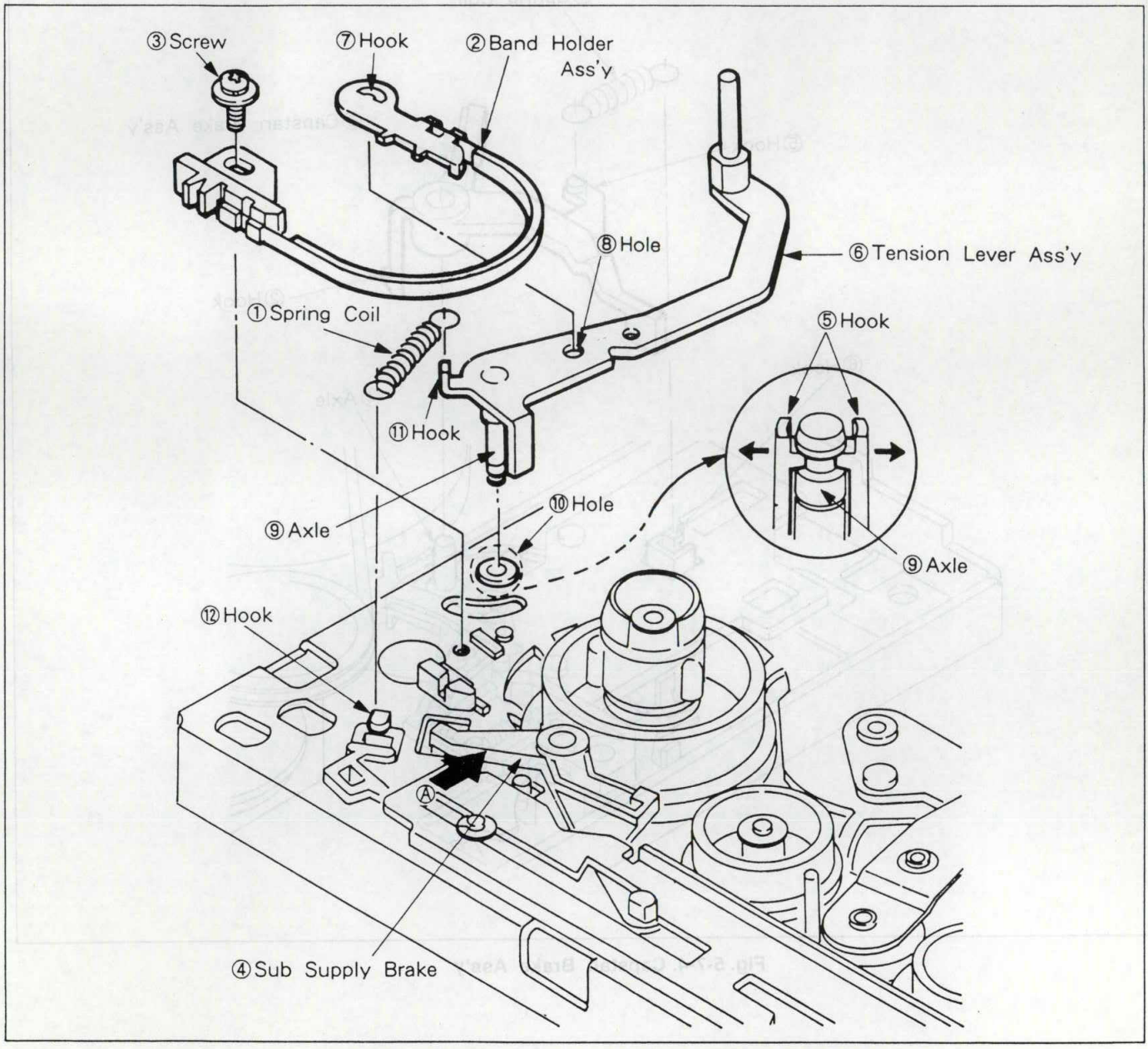

Fig. 5-7-3. Tension Lever Ass'y & Band Holder Ass'y

Published in Heiloo, Holland.

www.freeservicemanuals.info 11/15/15

Digitized by WWW.FREESERVICEMANUALS.INFO

5-7-4. Capstan Brake Ass'y (See Fig. 5-7-4.)

1. Removal

1) Remove the SPRING COIL ①.
2) Unhook the hook ②, then remove the CAPSTAN BRAKE ASS'Y ③.

2. Remounting

1) Mount the CAPSTAN BRAKE ASS'Y ③ onto the axle ④. Confirm that the hook ② is hooked to the chassis.
2) Hook the SPRING COIL ① between hooks ⑤ and ⑥. Fix the hook ⑥ side with adhesive (use an adhesive that allows later detaching).

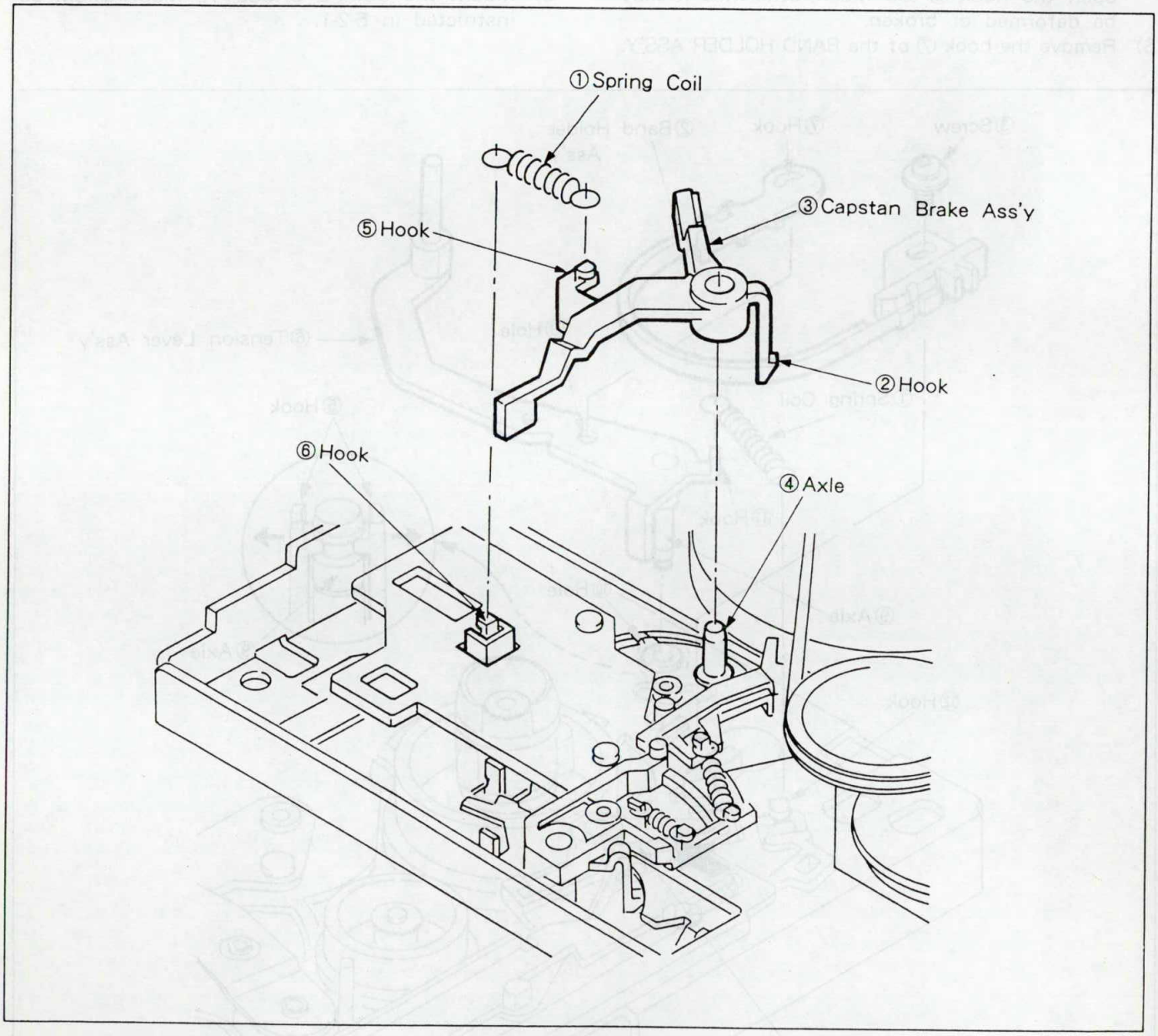

Fig. 5-7-4. Capstan Brake Ass'y

Published in Heiloo, Holland.

www.freeservicemanuals.info 11/15/15

Digitized by WWW.FREESERVICEMANUALS.INFO

5-8. REEL TABLE DRIVE MECHANISM

5-8-1. Supply Reel Ass'y and Supply Reel Gear (See Fig. 5-8-1.)

1. Removal

1) Remove the COMPL CASSETTE MECHANISM as instructed in 5-2-1.
2) Remove the BAND HOLDER ASS'Y as instructed in 5-7-3.
3) Set the PLAY mode with the mode selector (VHJ-0050).
4) Remove the special washer ①, then remove the SUPPLY REEL ASS'Y ② and the washer ③.
5) Remove the special washer ④.
6) While pushing the SUPPLY BRAKE ASS'Y ⑤ in the direction of arrow A, remove the SUPPLY REEL GEAR ⑥ and the washer ⑦.

Note : Be sure that no dirt gets on the section where both brake shoes make contact.

2. Remounting

1) Apply a little oil (less than one drop) to the part of the axle ⑧ indicated by the arrow B, then mount the washer ⑦.
2) While pushing the SUPPLY BRAKE ASS'Y ⑤ in the direction of arrow A, mount the SUPPLY REEL GEAR ⑥ onto the axle ⑧.
3) Mount the special washer ④ to the axle ⑧.
4) Apply 1 drop of oil to the part of the axle ⑨ indicated by the arrow C, then mount the washer ③.
5) Mount the SUPPLY REEL ASS'Y ② onto the axle ⑨.
6) Perform reel table height adjustment as instructed in 6-2-1.
7) Mount the special washer ① onto the axle ⑨.
8) Mount the BAND HOLDER ASS'Y as instructed in 5-7-3.
9) Perform tension pole position adjustment as instructed in 6-3.
10) Mount the COMPL CASSETTE MECHANISM as instructed in 5-2-1.

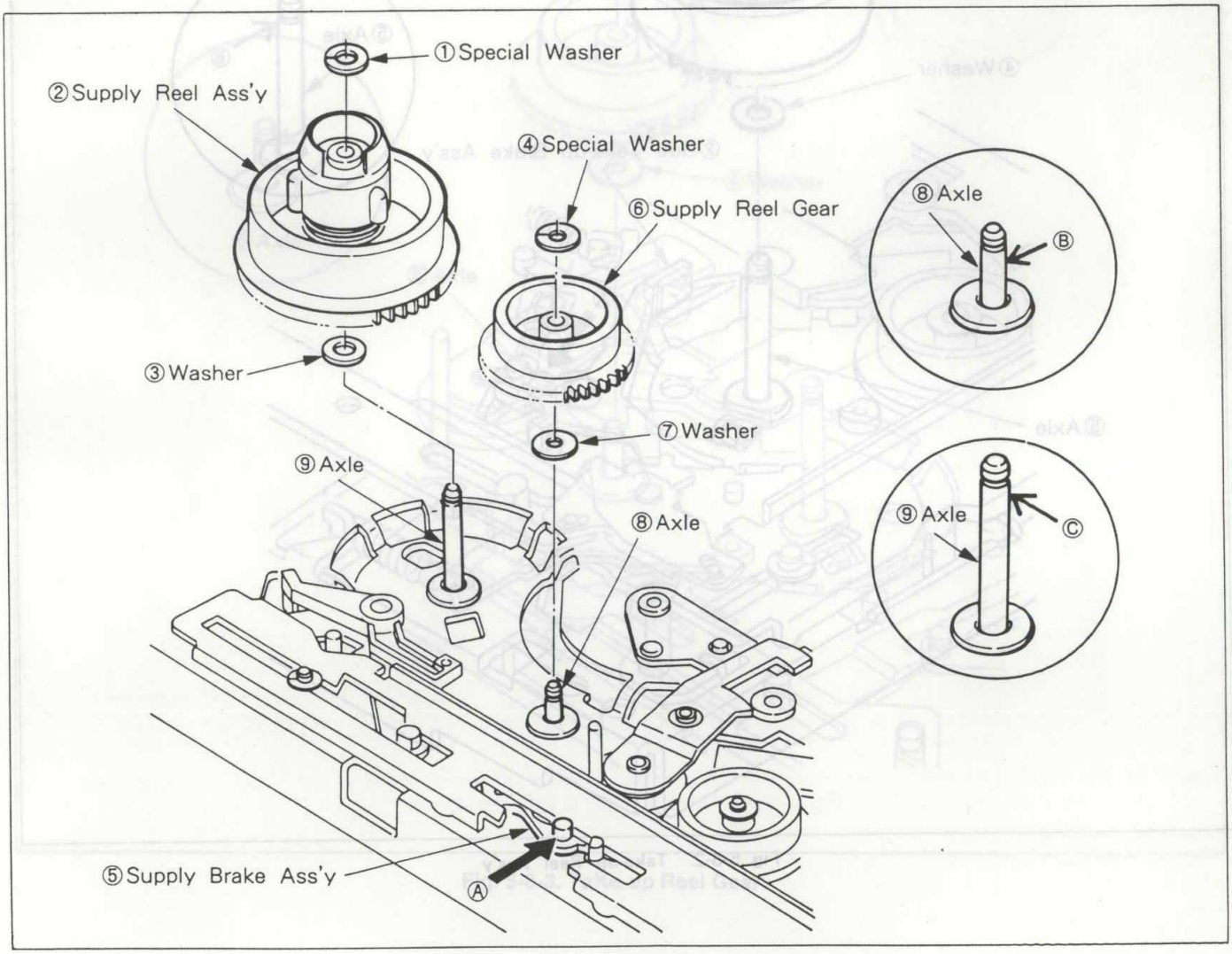

Fig. 5-8-1. Supply Reel Ass'y & Supply Reel Gear

Published in Heiloo, Holland.

www.freeservicemanuals.info 11/15/15

Digitized by WWW.FREESERVICEMANUALS.INFO

5-8-4. Reel Pulley and Friction Gear Ass'y (See Fig. 5-8-4.)

1. Removal

1) Remove the REEL DRIVE BELT ③.
2) Remove the special washer ④, then remove the REEL PULLEY ⑤.
3) Remove the special washer ⑥, then remove the FRICTION GEAR ASS'Y ⑦ and the washer ⑧.

2. Remounting

1) Apply one drop of oil to the parts of axles ⑨ and ⑩ indicated with arrows.
2) Mount the washer ⑧ and the FRICTION GEAR ASS'Y ⑦ onto the axle ⑨.
3) Mount the special washer ⑥ onto the axle ⑨.
4) Mount the REEL PULLEY ⑤ onto the axle ⑩.
5) Mount the special washer ④ onto the axle ⑩.
6) Set the REEL DRIVE BELT ③.

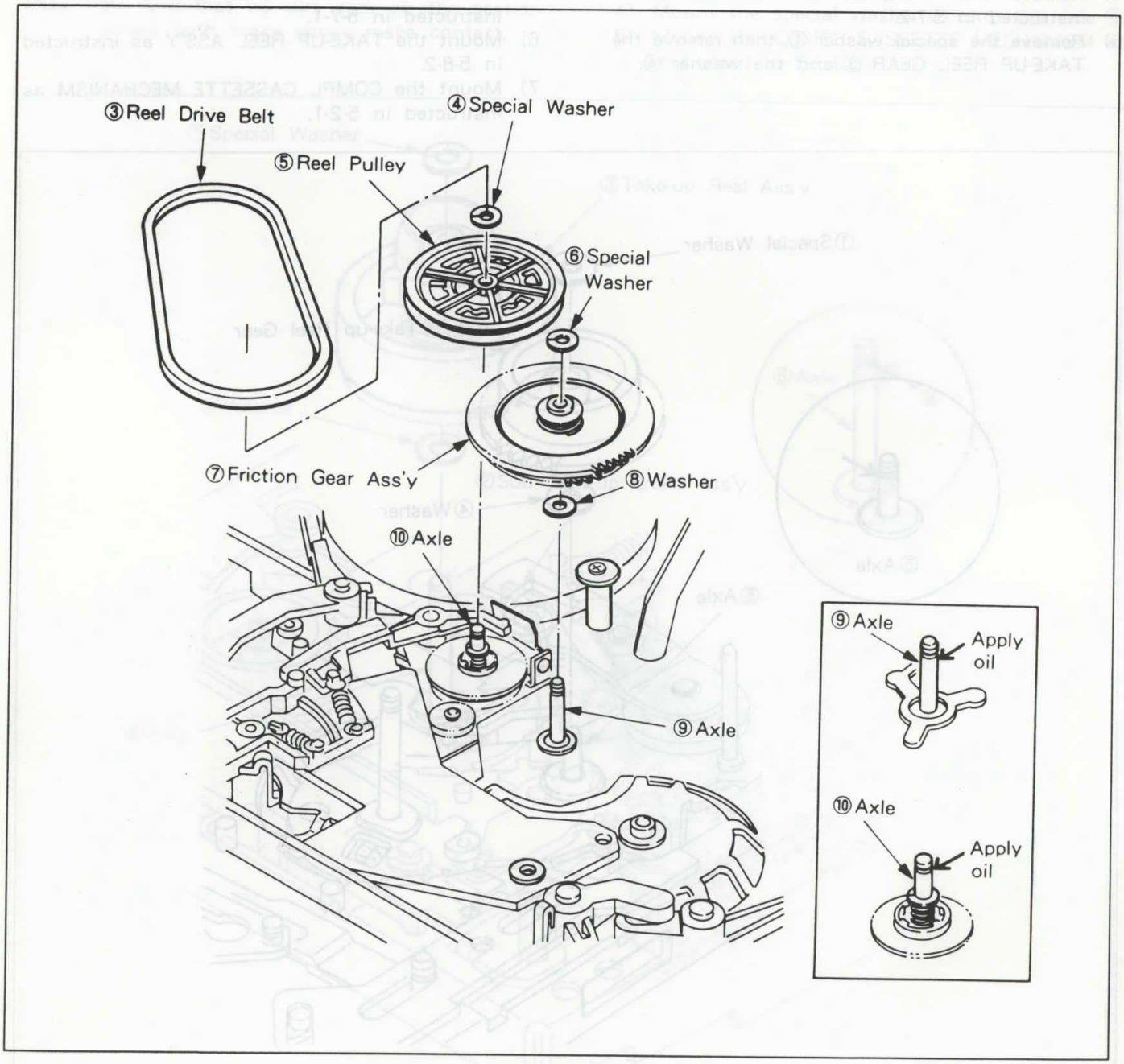

Fig. 5-8-4. Reel Pulley & Friction Gear

Published in Heiloo, Holland.

www.freeservicemanuals.info 11/15/15

Digitized by WWW.FREESERVICEMANUALS.INFO

5-8-5. COMPL Clutch (See Fig. 5-8-5.)

1. Removal

1) Remove the COMPL CASSETTE MECHANISM as instructed in 5-2-1.
2) Remove the REEL DRIVE BELT and the REEL PULLEY as instructed in 5-8-4.
3) Remove the screw ①, then remove the COMPL MC-4 ②.
4) Remove the two screws ③, then remove the COMPL CLUTCH ④.

2. Remounting

1) Mount the COMPL CLUTCH ④ with the two screws ③, aligning it with the protuberance ⑤.
2) After inserting the CN831 (COMPL MC-4) into the CN801 (COMPL MC-1), mount the COMPL MC-4 with the screw ①.
3) Mount the REEL PULLEY and REEL DRIVE BELT as instructed in 5-8-4.
4) Mount the COMPL CASSETTE MECHANISM as instructed in 5-2-1.

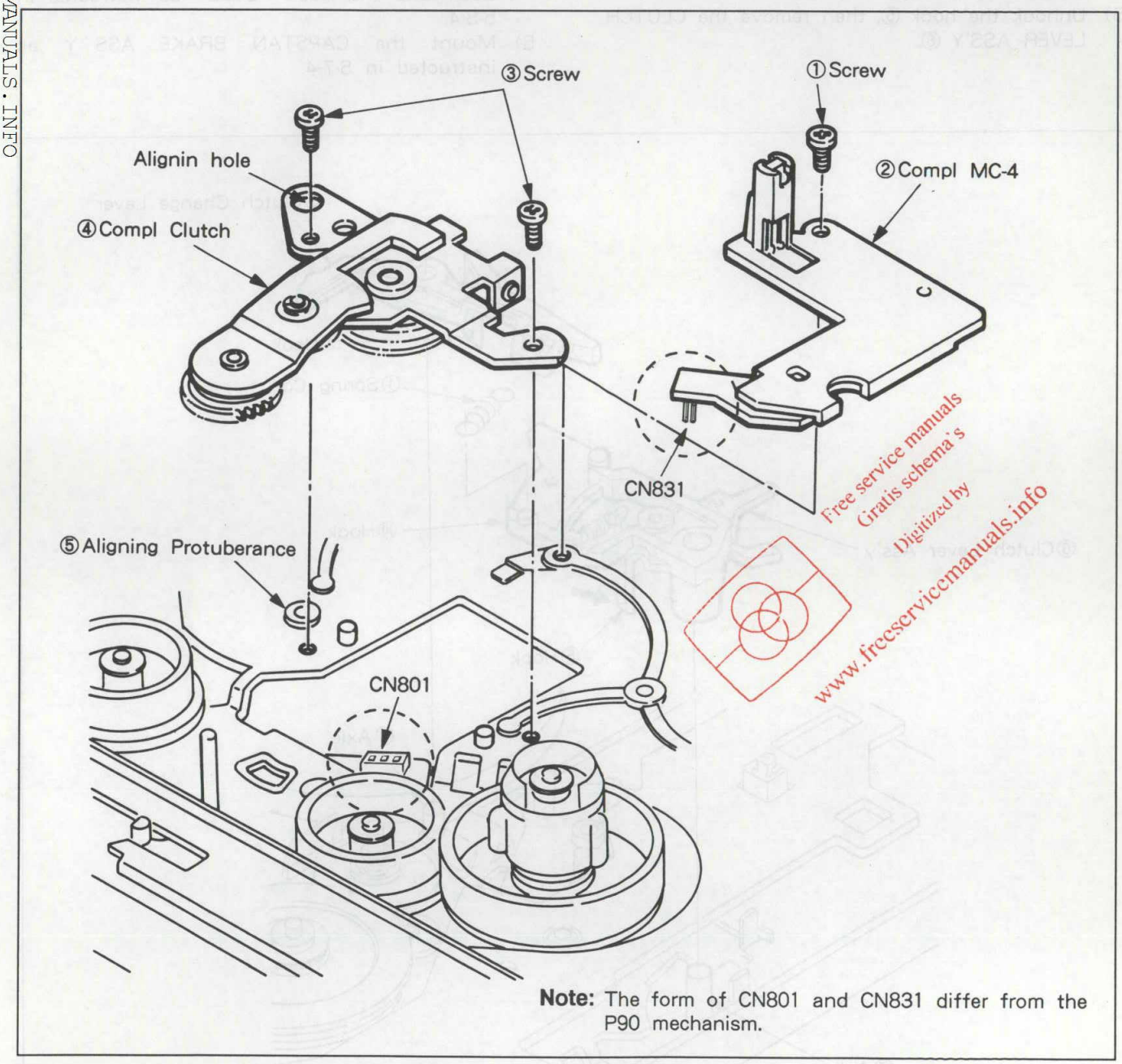

Free service manuals
Gratis schema's
Digitized by
www.freeservicemanuals.info

Note: The form of CN801 and CN831 differ from the P90 mechanism.

Fig. 5-8-5. Compl Clutch

Published in Heiloo, Holland.

www.freeservicemanuals.info 11/15/15

Digitized by WWW.FREESERVICEMANUALS.INFO

5-8-6. Clutch Change Lever and Clutch Lever Ass'y (See Fig. 5-8-6.)

1. Removal

1) Remove the CAPSTAN BRAKE ASS'Y as instructed in 5-7-4.
2) Remove the PULLEY BRACKET, the REEL DRIVE BELT and the REEL PULLEY as instructed in 5-8-4.
3) Remove the SPRING COIL ①.
4) Unhook the hook ②, then remove the CLUTCH CHANGE LEVER ③.
5) Unhook the hook ⑤, then remove the CLUTCH LEVER ASS'Y ⑥.

2. Remounting

1) Mount the CLUTCH LEVER ASS'Y ⑥ onto the axle ⑦. Confirm that the hook ⑤ is hooked to the chassis.
2) Mount the CLUTCH CHANGE LEVER ③ onto the axle ⑧. Confirm that the hook ② is hooked to the chassis.
3) Hook the SPRING COIL ① between the hooks ⑨ and ⑩.
4) Mount the PULLEY BRACKET, the REEL DRIVE BELT and the REEL PULLEY as instructed in 5-8-4.
5) Mount the CAPSTAN BRAKE ASS'Y as instructed in 5-7-4.

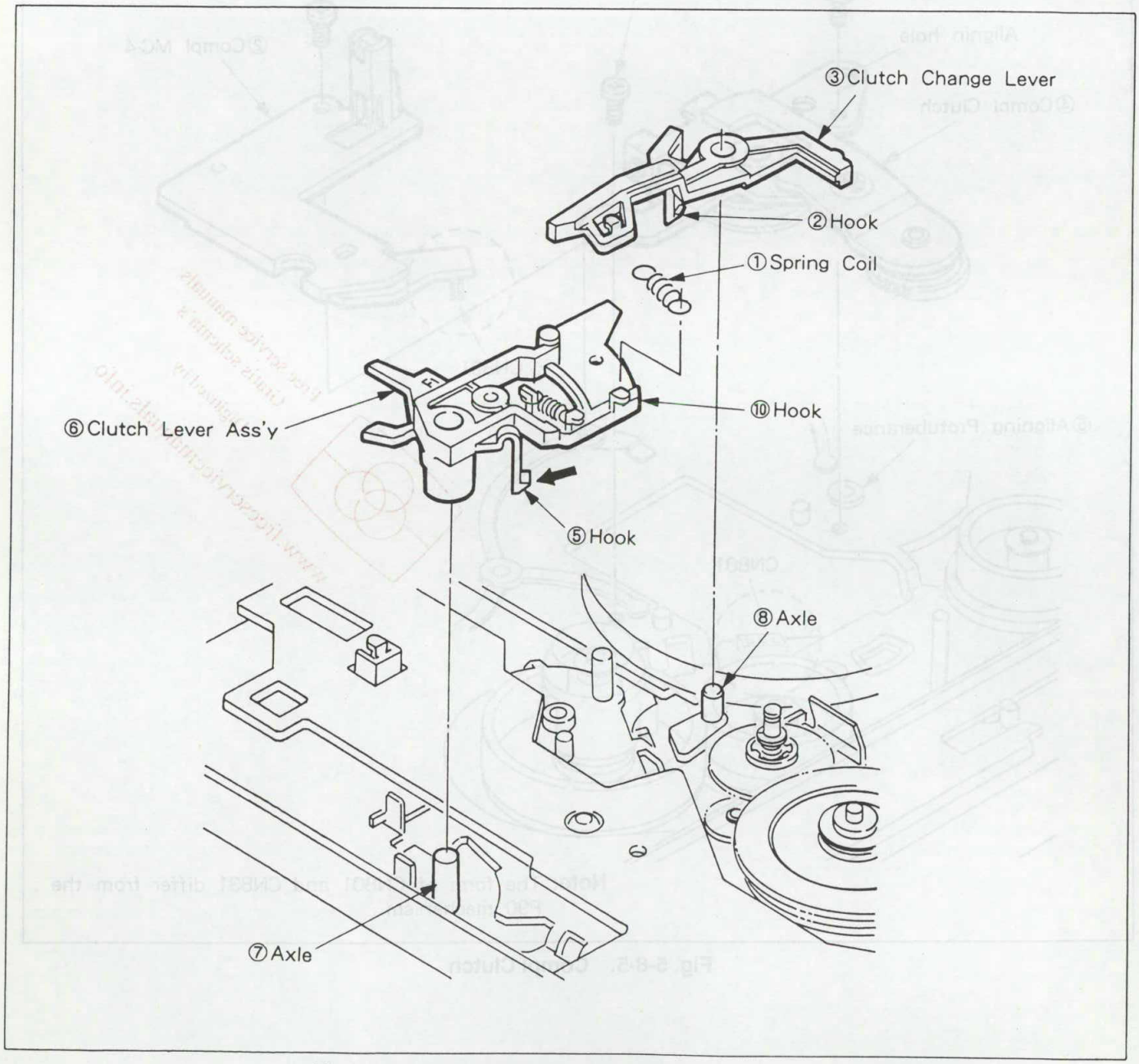

Fig. 5-8-6. Clutch Change Lever & Clutch Lever Ass'y

Published in Heiloo, Holland.

www.freeservicemanuals.info 11/15/15

Digitized by WWW.FREESERVICEMANUALS.INFO

5-9. CAPSTAN MOTOR (See Fig. 5-9-1.)

1. Removal

1) Remove the CAPSTAN BRAKE ASS'Y as instructed in 5-7-4.
2) Remove the CAPSTAN MOTOR ⑥ connector.
3) Remove the REEL DRIVE BELT ② from the CAPSTAN MOTOR PULLEY ①.
4) Remove the two screws ④ fixing the COMPL CASSETTE MECHANISM TOP BOARD ③, then slide the TOP BOARD ③ backward.
5) Remove the three screws ⑤, then remove the CAPSTAN MOTOR ⑥.

Note : Take care not to scratch or soil the capstan axle.

2. Remounting

1) Mount the CAPSTAN MOTOR ⑥ with the three screws ⑤.
2) Connect the CAPSTAN MOTOR ⑥ connector.
3) Mount the TOP BOARD ③ with the two screws ④.
4) Fit the REEL DRIVE BELT ② around the CAPSTAN MOTOR PULLEY ① and the REEL PULLEY ⑦.
5) Mount the CAPSTAN BRAKE ASS'Y as instructed in 5-7-4.

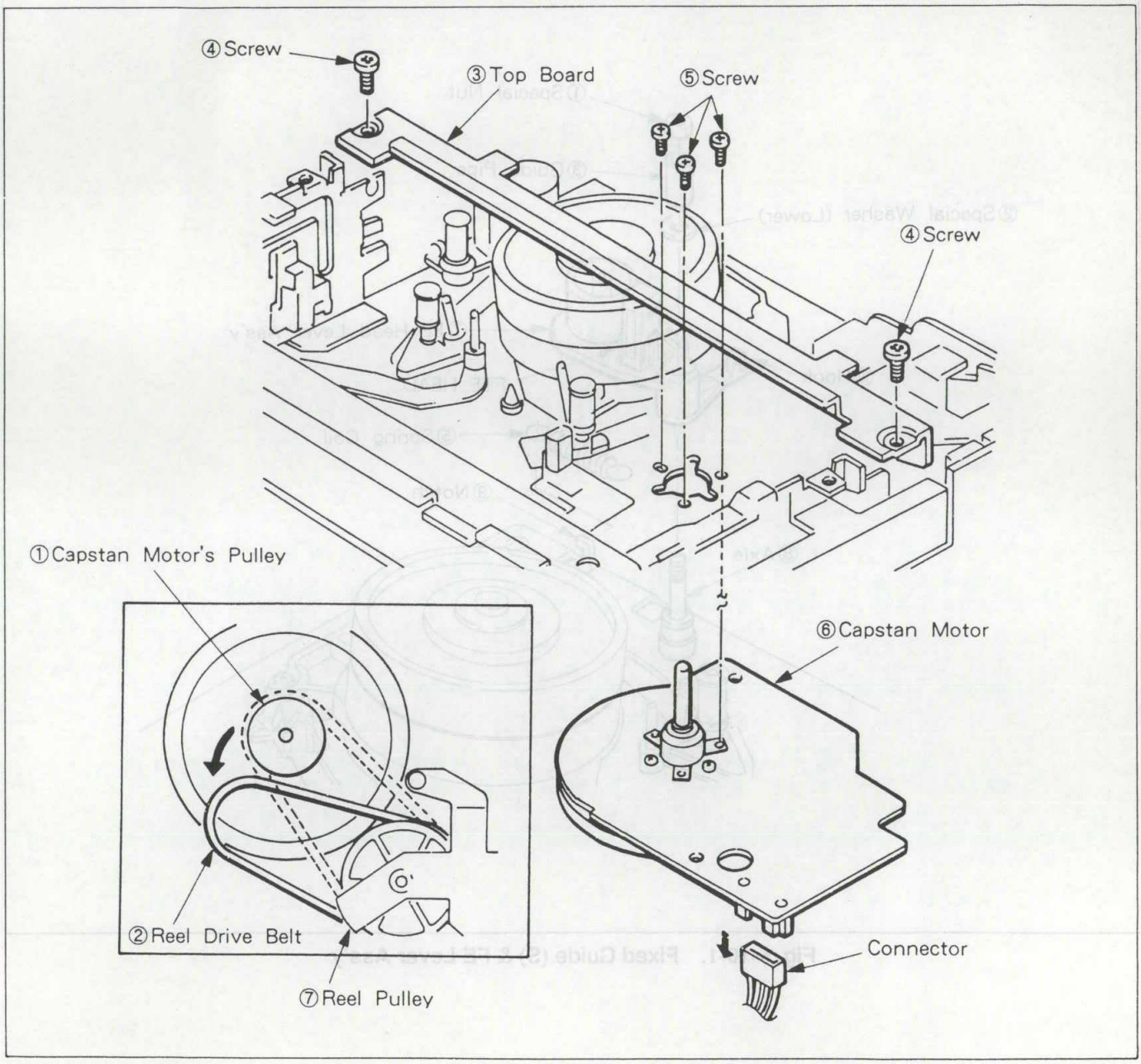

Fig. 5-9-1. Capstan Motor

Published in Heiloo, Holland.

www.freeservicemanuals.info 11/15/15

Digitized by WWW.FREESERVICEMANUALS.INFO

5-10. FIXED GUIDE, FE HEAD LEVER ASS'Y

5-10-1. S-Side Fixed Guide and FE Lever Ass'y (See Fig. 5-10-1.)

1. Removal

1) Remove the special nut ①, then remove the GUIDE PIPE ③ and the special washer ② (lower), in that order.
2) Remove the SPRING COIL ⑤.
3) Remove the FTE HEAD connector, then remove the FE HEAD LEVER ASS'Y ⑦.

2. Remounting

1) Mount the FE LEVER ASS'Y ⑦ onto the axle ⑧.
2) Hook the SPRING COIL ⑤ between the chassis notch ⑨ and the FE LEVER ASS'Y hook ⑩.
3) Mount the special washer ② (lower), the GUIDE pipe ③ and the special nut ① to the axle ⑧, in that order. At that time, do not excessively tighten the special nut ① to avoid idle rotation of the axle rivet. The height of fixing guide on the inlet side is not required.
4) Connect the connector to the FTE HEAD.

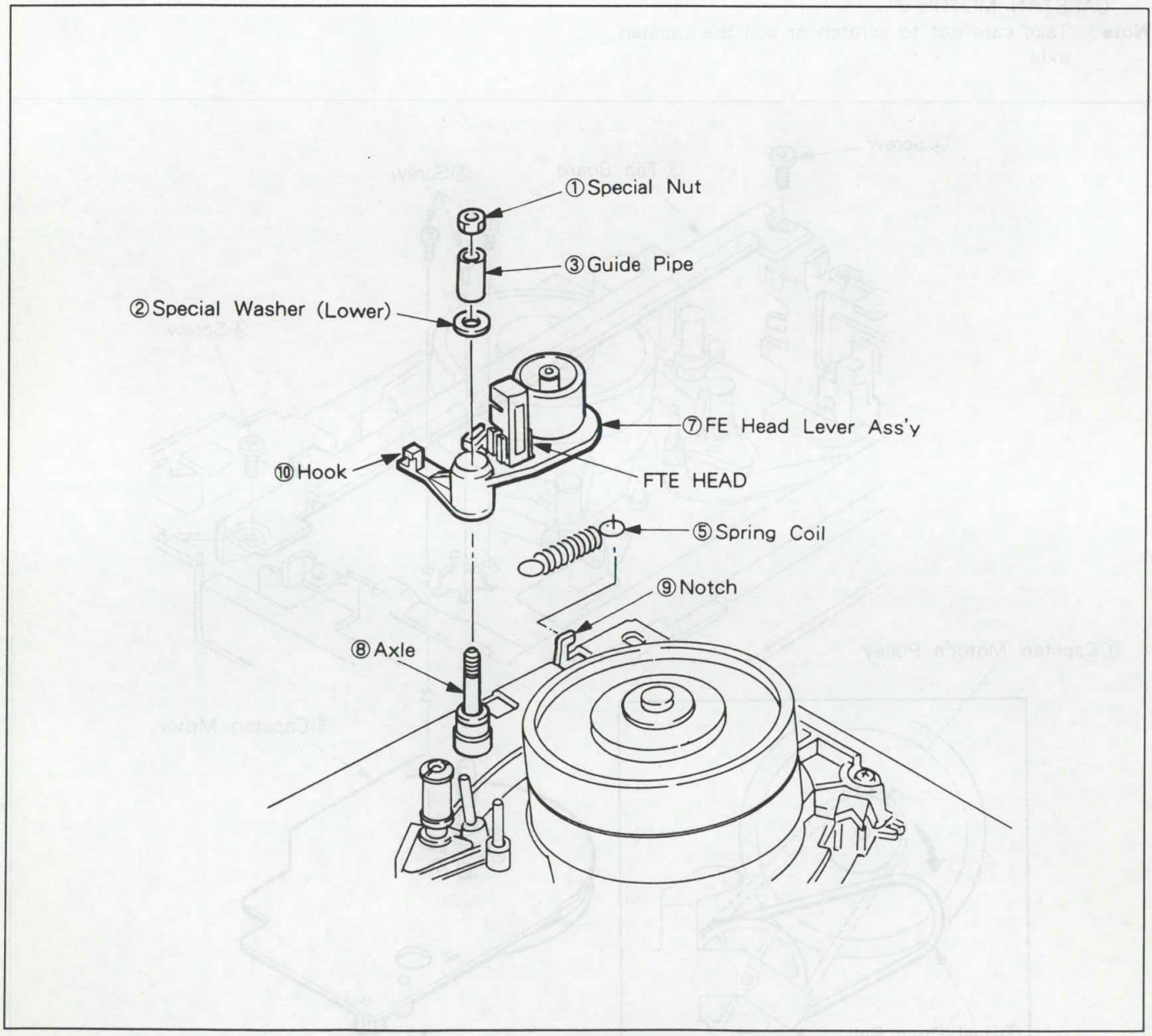

Fig. 5-10-1. Fixed Guide (S) & FE Lever Ass'y

Published in Heiloo, Holland.

www.freeservicemanuals.info 11/15/15

Digitized by WWW.FREESERVICEMANUALS.INFO

5-10-2. Impedance Roller, FTE Head (See Fig. 5-10-2.)

1. Removal

1) Remove the FTE HEAD (full track erase head) ① connector.
2) Remove the special washer ②, then remove the IMPEDANCE ROLLER ③ and the washer ④.
3) Open the hook ⑤ a little and remove the FTE HEAD ①.

Note : Take care not to open the hook too much, otherwise it may be deformed or broken.

2. Remounting

1) Mount the FTE HEAD ① onto the FE HEAD LEVER ASS'Y ⑥. Confirm that the hook ⑤ is hooked to the FTE HEAD ①.
2) Mount the washer ④ and the IMPEDANCE ROLLER ③, in that order, onto the axle ⑦, then mount the special washer ②.
3) Connect the connector to the terminal of the FTE HEAD ①.

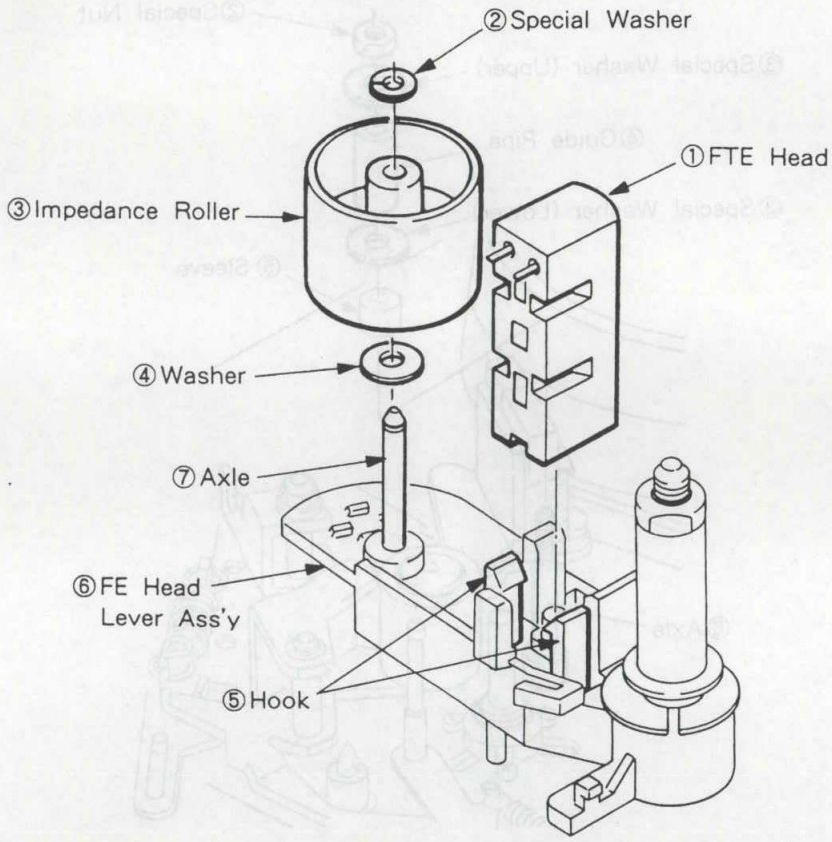

Fig. 5-10-2. Impedance Roller & FTE Head

Published in Heiloo, Holland.

www.freeservicemanuals.info 11/15/15

Digitized by WWW.FREESERVICEMANUALS.INFO

5-10-3. Exit side Fixed Guide (See Fig. 5-10-3.)

1. Removal

1) Remove the CAP ①.
2) Remove the special NUT ②, then remove the special washer ③ (upper), the GUIDE PIPE ④, the special washer ③ (lower) and the sleeve ⑤, in that order.

2. Remounting

1) Mount the sleeve ⑤, the special washer ③ (lower), the GUIDE PIPE ④, the special washer ③ (upper) and the special NUT ②, in that order, to the axle ⑥.
2) Mount the CAP ① onto the axle ⑥.

Note: There is no need of height adjustment of the exit side fixed guide.

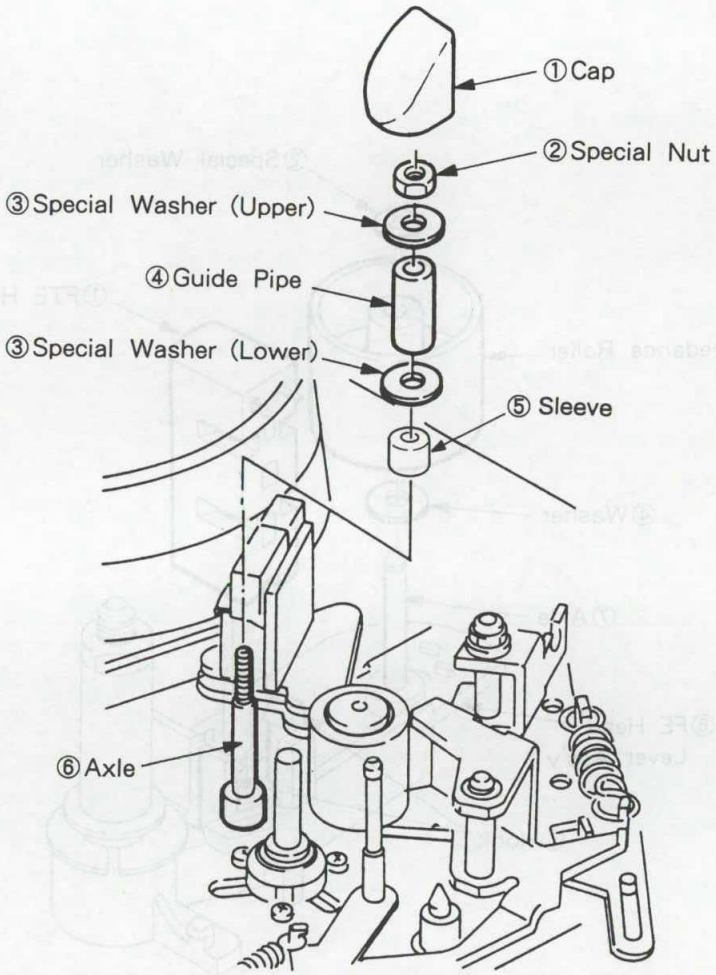

Fig. 5-10-3. Fixed Guide (T)

Published in Heiloo, Holland.

www.freeservicemanuals.info 11/15/15

Digitized by WWW.FREESERVICEMANUALS.INFO

5-11. DRUM SECTION

5-11-1. Drum Motor (rotor, stator) (See Fig. 5-11-1.)

1. Removal

1) Remove the screw ①, then remove the CYLINDER EARTH ASS'Y ②.
2) Remove the two screws ③, then remove the ROTOR ④ and SPACER.
3) Remove the STATOR board connector ⑩.
4) Remove the three screws ⑤, then remove the STATOR ⑥.

2. Remounting

1) Mount the STATOR ⑥ with the three screws ⑤.
2) Mount the SPACER ⑪ on to the AXLE ⑫.
3) While aligning the ROTOR oval hole ⑦ with the ROTOR DISK hole ⑧, mount the ROTOR with the two screws ③.
4) Insert the connector ⑩.
5) While aligning the CYLINDER EARTH ASS'Y ② protuberance with the chassis hole ⑨, mount it with the screw ①.

Note 1 : Use a torque driver (VHJ-0014) for mounting the STATOR ⑥ and the ROTOR ④. Set fastening torque to 3kg-cm.

Note 2 : When the drum unit has been replaced, perform a tape path adjustment as instructed in 6-4. and perform a CH-1/CH-2 switching position adjustment of the servo circuit.

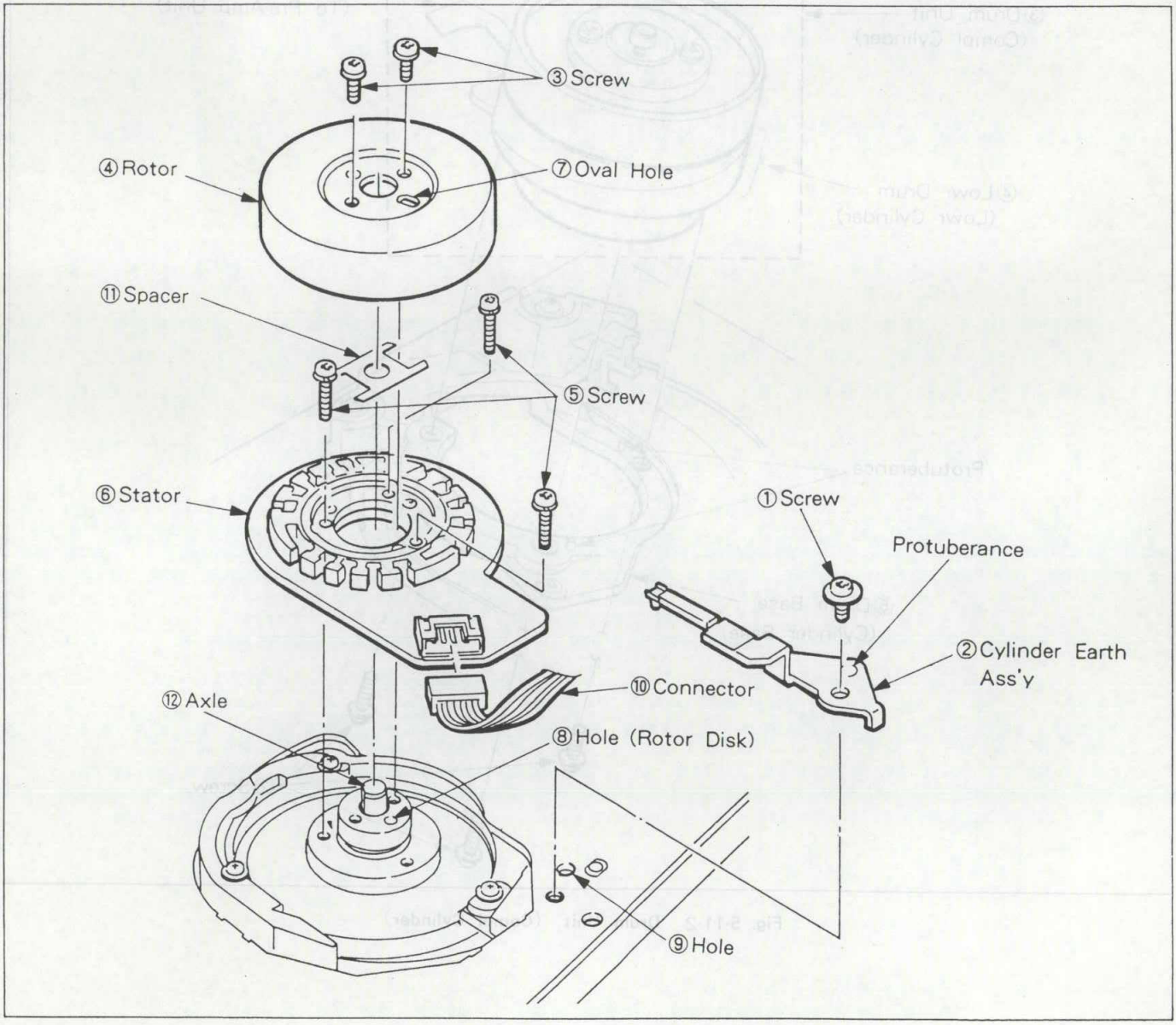

Fig. 5-11-1. Drum Motor

Published in Heiloo, Holland.

www.freeservicemanuals.info 11/15/15

Digitized by WWW.FREESERVICEMANUALS.INFO

5-11-2. Drum Unit (See Fig. 5-11-2.)

1. Removal

1) For some models with the board located above the upper drum, remove the board.
2) Remove the flexible P.C.B. ① from the PRE-AMP UNIT (take care not to pull the flexible P.C.B. in the upward direction).
3) Remove the LOAD RACK only, as instructed in 5-4-1.
4) Remove the three screws ②, then remove the drum unit ③.

NOTE : When removing and remounting the drum unit, handle it carefully to protect it from scratches and dirt.

2. Remounting

1) While aligning the drum unit ③ to the protuberance, mount it to the drum base (CYLINDER BASE) ⑤ with the three screws ②.
2) Mount the ROAD RACK as instructed in 5-4-1.
3) Insert the flexible P.C.B. into the PRE-AMP UNIT.
4) Clean the drum unit.
5) Perform the tape path adjustment as instructed in 6-4. and perform the CH-1/CH-2 switching position adjustment of the servo circuit.

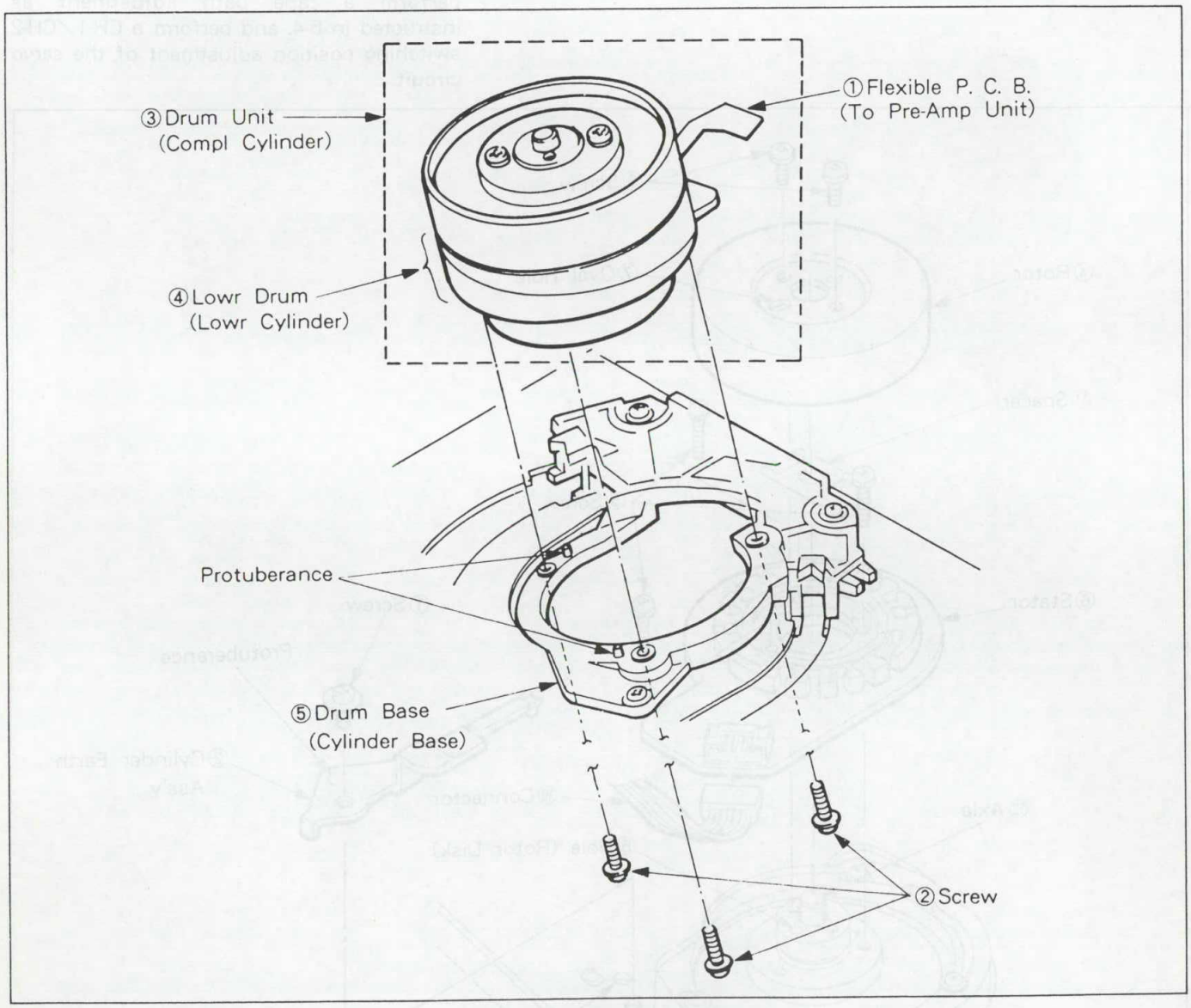

Fig. 5-11-2 Drum Unit (Compl Cylinder)

Published in Heiloo, Holland.

www.freeservicemanuals.info 11/15/15

Digitized by WWW.FREESERVICEMANUALS.INFO

5-11-3. Upper Drum (Upper Cylinder)

1. Removal

1) Remove the two screws ① (see Fig. 5-11-3).
2) In case the RE (ROTARY ERASE) HEAD is attached to the upper drum (UPPER CYLINDER), remove the lead wires soldered from the P.C. board (see Fig. 5-11-4.).
3) Turn the head removing jig (VHJ-0041) handle ② counterclockwise to lift up the stopper ③ (see Fig. 5-11-5.).
4) Insert the two long screws ④ of the jig into the screw holes ⑥ located on the head chip side of the upper drum (UPPER CYLINDER) ⑤, then mount by turning the handle clockwise.
5) While holding the jig so that the upper drum ⑤ does not rotate, turn the handle ② clockwise to remove the upper drum.
6) Remove the jig from the upper drum.

Note : Handle parts carefully to protect the drum from scratches and dirt, and the video head from damage.

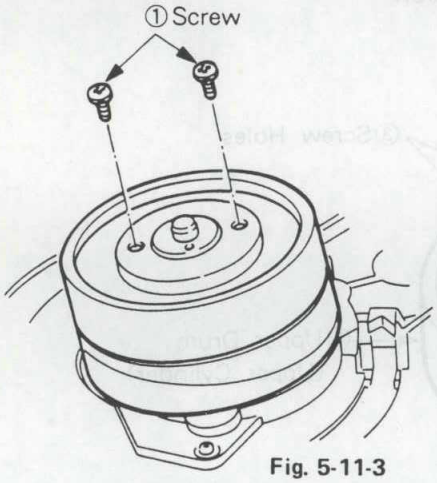

Fig. 5-11-3

Lead wires of Rotary Erase Head (Model for flying erase capability)

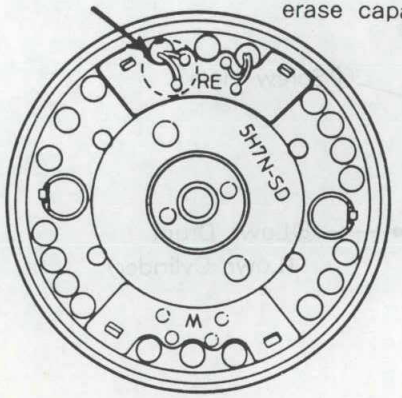

Fig. 5-11-4

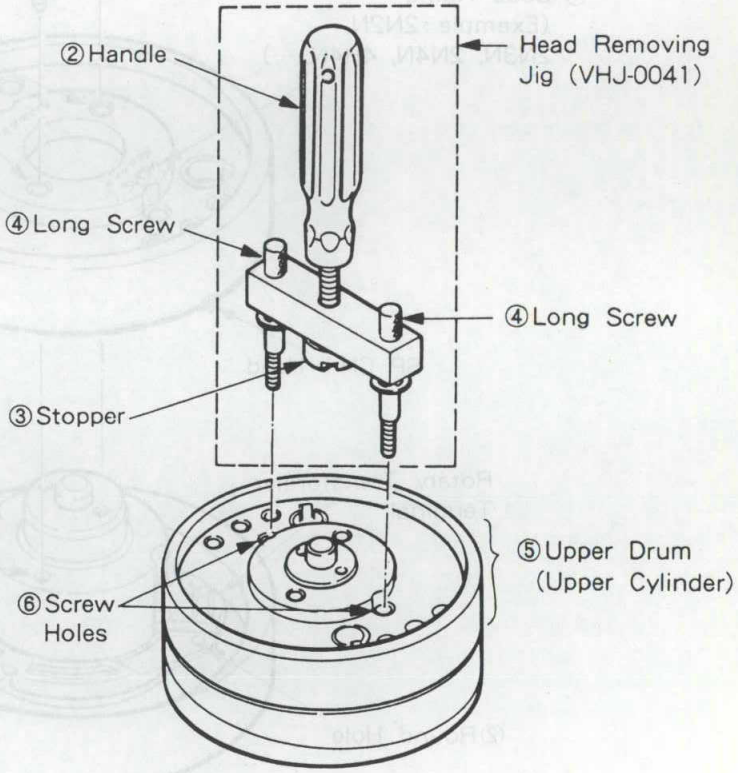

Fig. 5-11-5

Upper Drum (Upper Cylinder)

Published in Heiloo, Holland.

www.freeservicemanuals.info 11/15/15

Digitized by WWW.FREESERVICEMANUALS.INFO

2. Remounting (See Fig. 5-11-6.)

1) Confirm that surfaces where the flywheel and the upper drum (UPPER CYLINDER) are engaged or make contact portion are free from scratches and dirt.
2) The code name ① of the drum is printed on the video head side of the upper drum ⑤ SP CH-1 (channel A, plus azimuth). The code name ① is set with in the rotary transformer terminal round hole side ② position of lower drum (LOWER CYLINDER), so that the two screw holes ③ of the upper drum are aligned with the two screw holes ④ of the flywheel. (Refer to 3. Recognizing the SP CH-1 Head side).
3) In case the RE (ROTARY ERASE) HEAD is attached to the upper drum, pass the lead wires through the lead wire hole. (See Fig.5-11-4.)
4) While keeping the upper drum ⑤ parallel to the lower drum (LOWER CYLINDER) ⑧, insert it completely into the flywheel.
5) Temporarily tighten the two screws ⑦ alternately a little at a time, then tighten them to a torque of 6kg-cm using a torque driver (VHJ-0014) and a 3mm bit (VHJ-0045).
6) In case the RE head is attached to the upper drum ⑤, solder the lead wires to the P.C. board. Solder the red lead wire to the R terminal, and the yellow lead wire to the Y terminal.

Note : When the upper drum has been replaced, perform a tape path adjustment as instructed in 6-4. and CH-1/CH-2 switching position adjustment of the servo circuit.

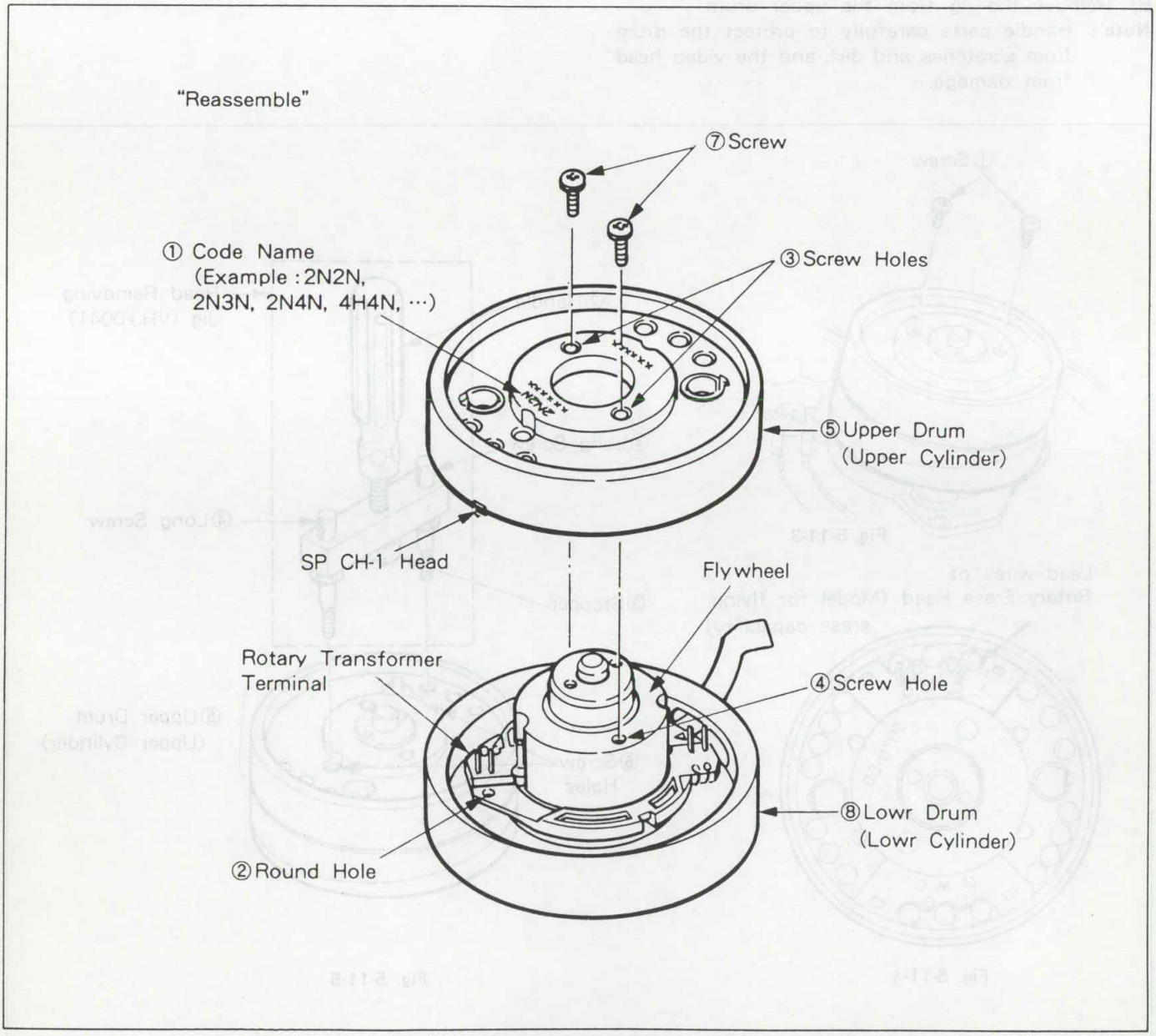

Fig. 5-11-6.

Published in Heiloo, Holland.

www.freeservicemanuals.info 11/15/15

Digitized by WWW.FREESERVICEMANUALS.INFO

3. Recognizing the SP CH-1 Head Side

No playback picture can be obtained if the video head is not wired as a pair with the rotary transformer located inside the lower drum rotating section. Therefore, mounting position should be matched when mounting the upper drum. In the P90 mechanism series, the code name of the drum is printed on the SP CH-1 (CH-A, plus azimuth) side as a mark for mounting the upper drum. (See Fig. 5-11-7.) This code name differs according to the drum type, but its basic form is as follows :

Code Name Form

4	H	4	P	D	S
A	B	C	D	E	F

A = Number of head bases
B = "N" for normal audio
"H" for HI-FI audio
C = Number of heads
D = TV system ("N" or "P")
EF = Code for detailed classification. Depending on drum type, it can also be just one character, or a blank space.

Examples of Detailed Classification Codes
V = Head with level difference
D = Compatible with digital units
S = SVHS-compatible

Examples of Code Names
2N2P, 2N2P-L, 2N2P-V, 2N2P-D, 2N3P, 2N4P, 4H4P, 4H4P-D

Moreover, there is a round hole with marking purposes on the SP CH-1 (CH-A, plus azimuth) side of the lower drum rotary transformer terminal. As shown in Fig. 5-11-8, there are two types of rotary transformer terminals (the number of pins differs according to the number of heads).

Note : When ordering parts such as drums (CYLINDERS), do not use the code names ; always refer to the parts list and order with the specified part numbers.

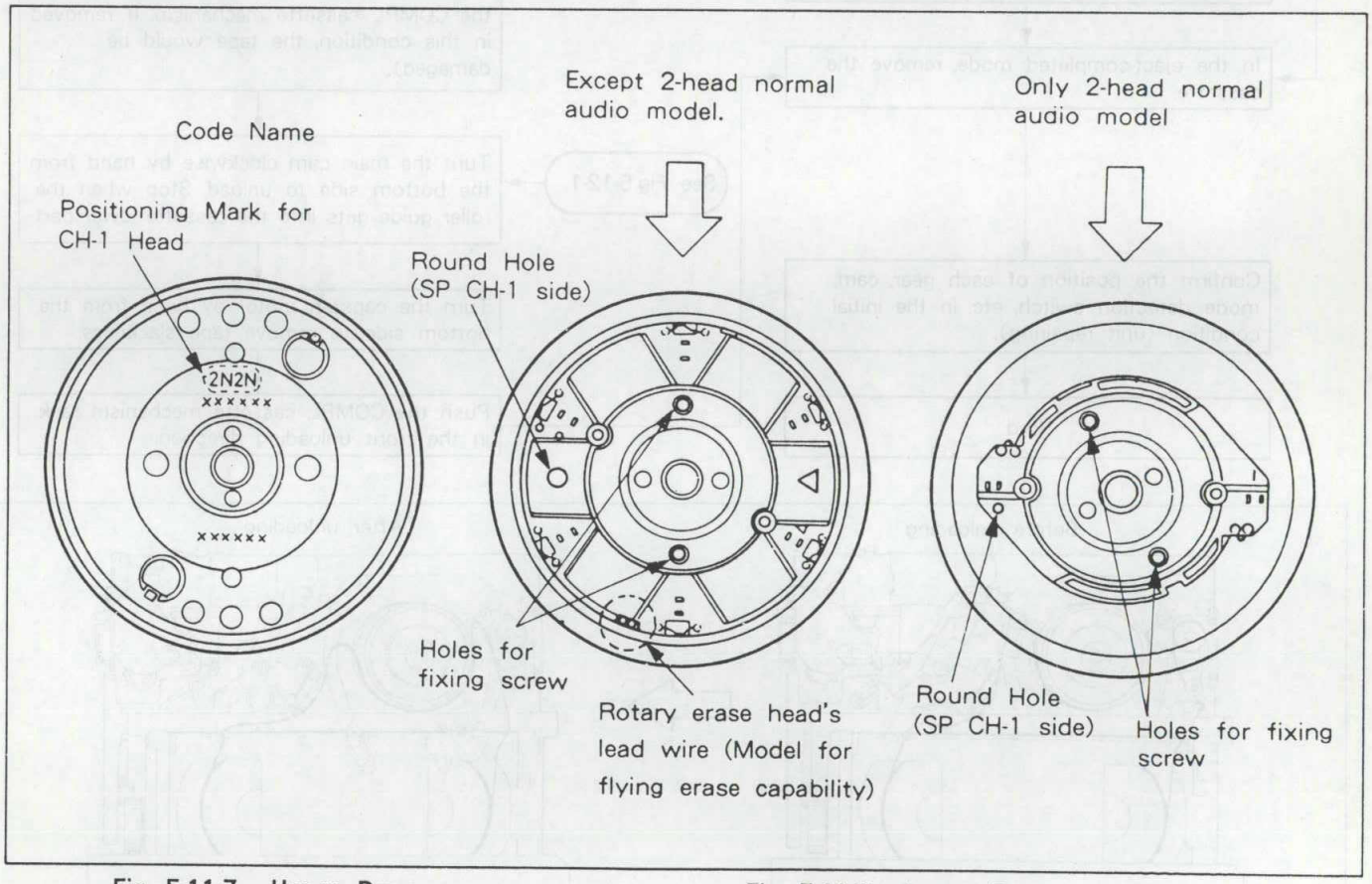
Except 2-head normal audio model.
Only 2-head normal audio model
Code Name
Positioning Mark for CH-1 Head
Round Hole (SP CH-1 side)
2N2N
Holes for fixing screw
Rotary erase head's lead wire (Model for flying erase capability)
Round Hole (SP CH-1 side)
Holes for fixing screw

Fig. 5-11-7. Upper Drum

Fig. 5-11-8. Lower Drum

Published in Heiloo, Holland.

www.freeservicemanuals.info 11/15/15

Digitized by WWW.FREESERVICEMANUALS.INFO

5-12. HOW TO PROCEED WHEN THE CASSETTE CANNOT BE REMOVED

The cassette cannot be removed.

Find the cause of trouble and repair it (Try turning the loading motor by hand, etc.).

NG

Connect the mode selector and keep the left side (⇦) of its mode selector key pressed to unload.
Stop when the roller guide gets into the cassette lower part (Stop before front unloading starts. Take care of tape entanglement).

NG

Remove the mechanism main unit as explained in 5-1.

Remove the holder bracket and the front helical gear as explained in 5-3-2 (Do this with the COMPL cassette mechanism and the COMPL holder motor still attached to the mechanism main body).

Remove the COMPL holder motor as explained in 5-3-1 (Be sure not to remove the COMPL cassette mechanism. If removed in this condition, the tape would be damaged).

Turn the main cam clockwise by hand from the bottom side to unload. Stop when the roller guide gets into the cassette lower part.

Turn the capstan motor by hand from the bottom side to remove tape slackness.

Push the COMPL cassette mechanism rack in the front unloading direction.

See Fig.5-12-1.

See Fig.5-12-1.

Turn the capstan motor by hand from the bottom side to remove tape slackness.

Keep the left side (⇦) of the mode selector key pressed to perform front unloading.

In the eject-completed mode, remove the cassette.

Confirm the position of each gear, cam, mode detection switch, etc. in the initial condition (unit repairing).

End

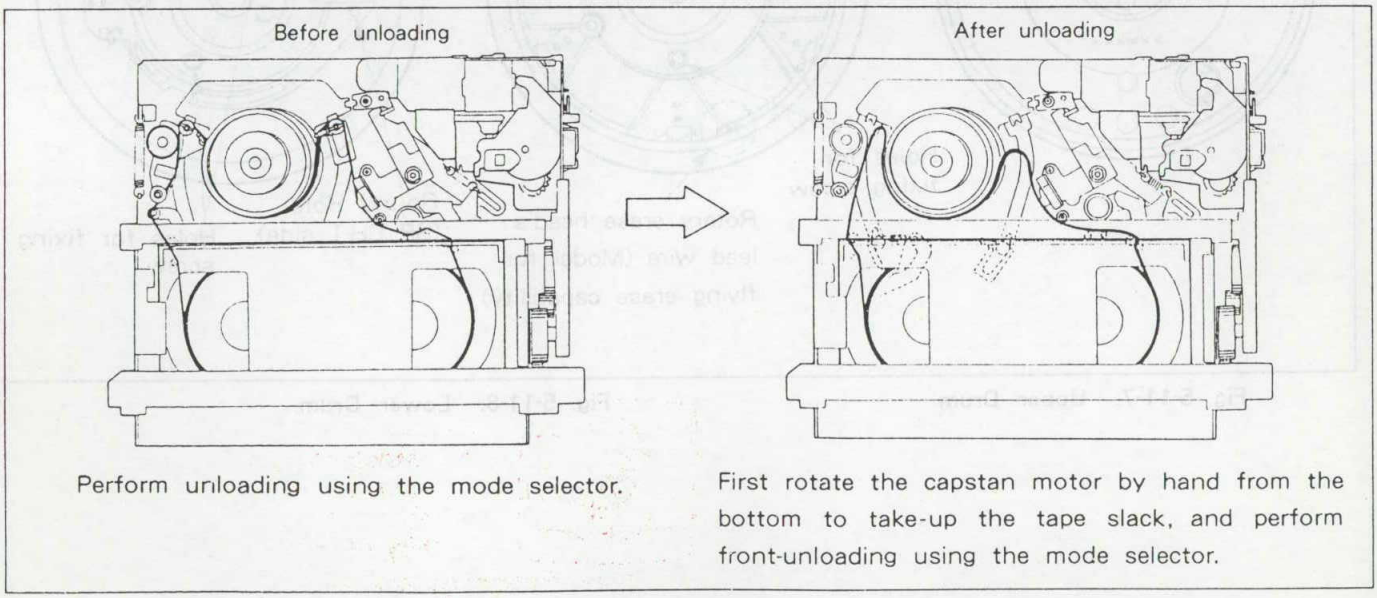

Perform unloading using the mode selector.

First rotate the capstan motor by hand from the bottom to take-up the tape slack, and perform front-unloading using the mode selector.

Fig. 5-12-1

Published in Heiloo, Holland.

www.freeservicemanuals.info 11/15/15

Digitized by WWW.FREESERVICEMANUALS.INFO

5-13. AUTO HEAD CLEANER MECHANISM (See. Fig. 5-13-1 • Fig. 5-13-2 • Fig. 5-13-3)

1. Removal

Note:
- Do not hold the ROLLER CLEANER ASS'Y ① by bare hand. Use tweezers and gloves not soiled with grease or dust, etc.
- When the cleaning function deteriorates and replacing only ROLLER CLEANER ASS'Y ①, there is no need to perform item 4).

1) Make sure that the ROLLER CLEANER ASS'Y ① is not pressed against a drum (cylinder).
2) Remove the PRE-AMP UNIT and the PRE-AMP BRACKET.
3) Remove screw ②, then lift up and remove the BRACKET CLEANER ASS'Y ③.
4) With the BRACKET CLEANER ASS'Y ③ is fixed by finger, turn the LEVER CLEANER ASS'Y ④ 35° to 40° to clockwise, then lift up and remove.
5) Remove the stop washer ⑤, then remove the ROLLER CLEANER ASS'Y ①.

2. Remounting

1) Mount the ROLLER CLEANER ASS'Y ① and the stop washer ⑤ to the axle ⑥ of LEVER CLEANER ASS'Y.
   Mount the ROLLER CLEANER ASS'Y ① so that the mark shown in Fig. 5-13-2 is up side. If the mark is down side, noise may occur.
2) Mount the SPRING COIL ⑧ and the LEVER CLEANER ASS'Y ④ to the axle ⑦ of BRACKET CLEANER ASS'Y. At this time, hook the SPRING COIL ⑧ to the hole ⑨ of the LEVER CLEANER ASS'Y and the bent part ⑩ of the BRACKET CLEANER ASS'Y. "A part" of the LEVER CLEANER ASS'Y should be under "B part" of the BRACKET CLEANER ASS'Y.
3) Fix the BRACKET CLEANER ASS'Y ③ on screw hole ⑫ by screw ②. Before fasten screw ②, insert hole ⑪ of the BRACKET CLEANER ASS'Y to axle ⑯, axle ⑦ to hole ⑬ to match positions. Pin ⑭ of the LEVER CLEANER ASS'Y should be run along the circumference of the MAIN CAM ⑮ not to be came off.
4) The upper side of the lower drum should be within approx. 2mm from the lower side of the ROLLER CLEANER ASS'Y as shown in Fig. 5-13-3.
5) Mount the PRE-AMP BRACKET and the PRE-AMP UNIT.

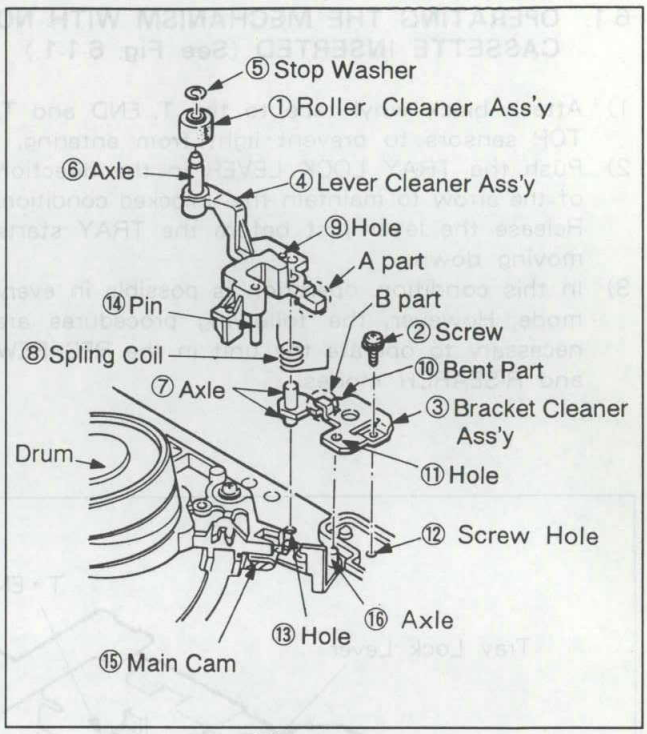

Fig. 5-13-1

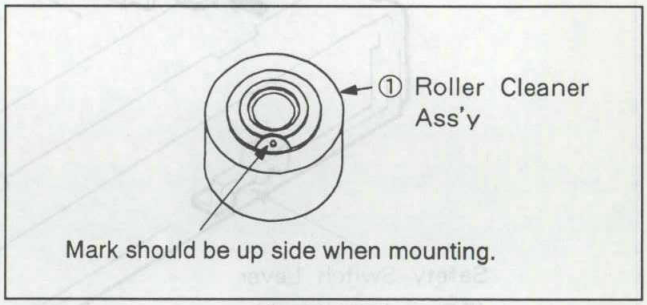

Fig. 5-13-2

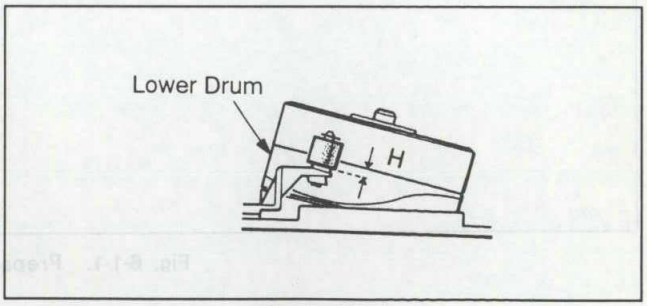

Fig. 5-13-3

Free service manuals
Gratis schema's
Digitized by
www.freeservicemanuals.info

Published in Heiloo, Holland.

www.freeservicemanuals.info 11/15/15

Digitized by WWW.FREESERVICEMANUALS.INFO

SECTION 6
MECHANISM ADJUSTMENTS

6-1. OPERATING THE MECHANISM WITH NO CASSETTE INSERTED (See Fig. 6-1-1.)

1) Attach black vinyl tape to the T. END and T. TOP sensors to prevent light from entering.
2) Push the TRAY LOCK LEVER in the direction of the arrow to maintain the unlocked condition. Release the lever just before the TRAY starts moving down.
3) In this condition, operation is possible in every mode. However, the following procedures are necessary to operate the unit in the REC, REW and R-SEARCH modes.

REC mode : Push the SAFETY SW LEVER to turn the SAFETY SWITCH (Erasure Prevention Switch) ON, then press the REC button. If the SAFETY SWITCH is not turned ON, the unit will enter the EJECT mode.

REW/R-SEARCH : After pressing the REW button, turn the TAKE-UP REEL ASS'Y by hand. Otherwise, the reel sensor will operate, setting the INITIAL mode after 2 to 3 seconds.

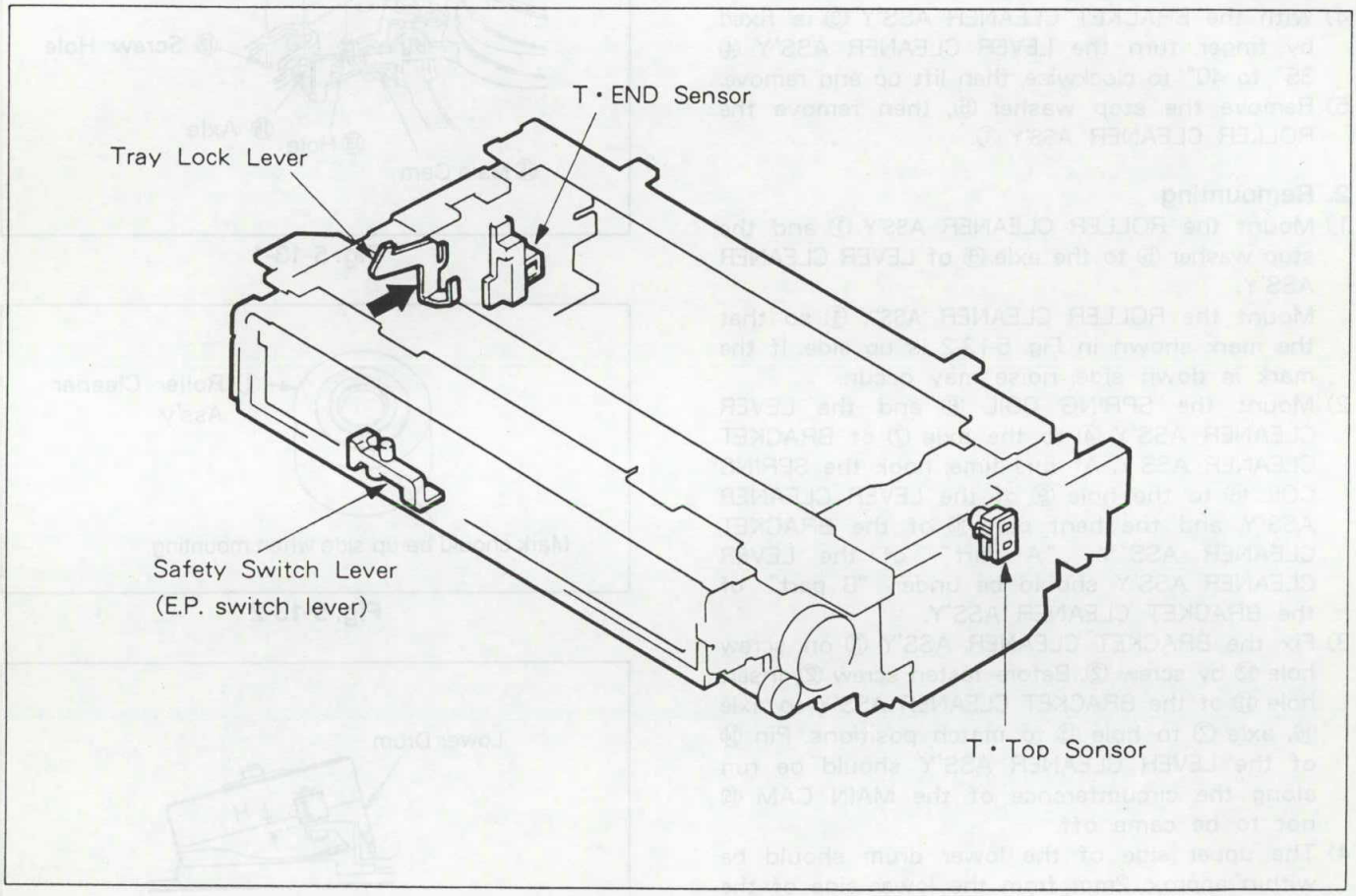

Fig. 6-1-1. Preparations for Adjustment

Published in Heiloo, Holland.

www.freeservicemanuals.info 11/15/15

Digitized by WWW.FREESERVICEMANUALS.INFO

6-2. REEL TABLE HEIGHT ADJUSTMENT AND TORQUE CHECK

6-2-1. Reel Table Height (See Fig. 6-2-1.)

If the SUPPLY REEL ASS'Y or the TAKE-UP REEL ASS'Y is raplaced, it will be necessary to adjust the REEL TABLE height.

(1) Remove the COMPL CASSETTE MECHANISM as instructed in 5-2-1 of Service Manual.
(2) Attach the master plane (H-7099-279-H) and reel disc height jig (H-7099-038-H) in the direction of the arrows.
(3) Confirm that, when the gauge stops, the REEL TABLEs are not in contact with surface A of the plate and side of the REEL TABLEs are in contact with surface B.
(4) If the REEL TABLE is in contact with surface A, remove a spacer and check again.
(5) If the REEL TABLE is not in contact with surface B, add a spacer and check again.
(6) Remove the master plane.
(7) Set the EJECT mode with the mode selector.
(8) Mount the COMPL CASSETTE MECHANISM as instructed in 5-2-1 of Service Manual.

Note:

- Adjust the reel table height by adding or removing spacers(0.13t, 0.25t, 0.3t, 0.4t and 0.5t)as appropriate so that the height meets the specifications. Use the same method for both the TAKE-UP REEL TABLE and the SUPPLY REEL TABLE.
  (The 0.5t washer is included as the standard washer for the SUPPLY REEL ASS'Y. The 0.4t washer is included as the standard washer for the TAKE-UP REEL ASS'Y.)
- If the height of the reel table is not within the specified value, the tape edge might be damaged as a result, or the tape path adjustment might not be possible to make.

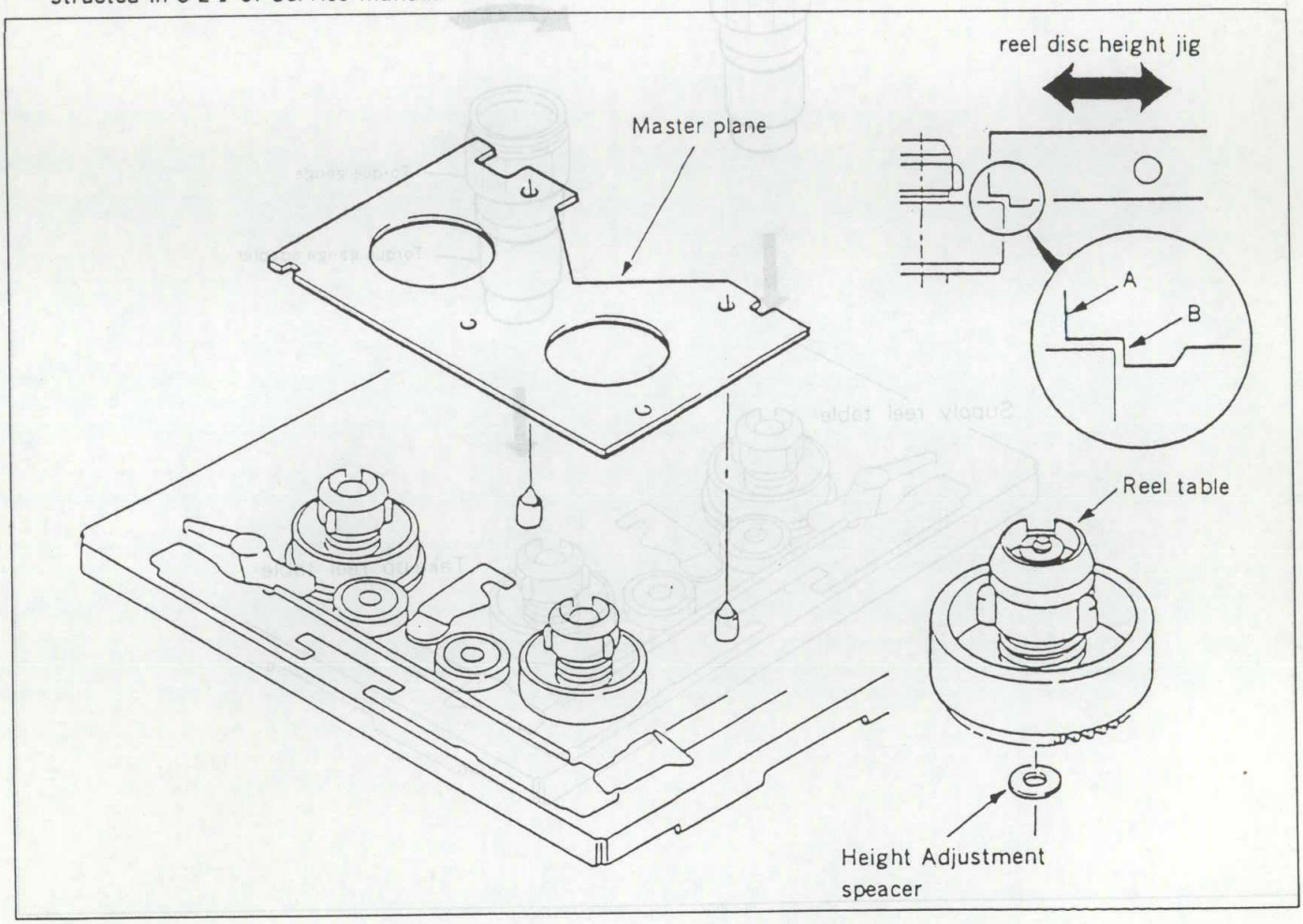

Fig. 6-2-1. Reel Table Height Adjustment

Published in Heiloo, Holland.

www.freeservicemanuals.info 11/15/15

Digitized by WWW.FREESERVICEMANUALS.INFO

6-2-2. Torque Check (See Fig. 6-2-2.)

1) Set the unit to operating condition without a cassette inserted as instructed in 6-1.
2) Measure the SUPPLY REEL TABLE torque in the REW mode, and confirm that it is 750gcm or more. Perform this measurement keeping the torque gauge in a fixed position with your hand (locked torque).
3) Measure the TAKE-UP REEL TABLE torque in the F.FWD mode, and confirm that it is 600gcm or more (locked torque).
4) Measure the TAKE-UP REEL TABLE torque in the playback mode (SP tape speed), and confirm that it is within 80 through 140gcm (locked torque).
5) Measure the SUPPLY REEL TABLE torque in the REV (F-SEARCH) mode, and confirm that it is within 150 through 240 gcm (locked torque).
6) After confirming that torque readings are within the specifications for each mode, check the following :
   ⓐ Dirt on the capstan motor and the REEL PULLEY groove.
   ⓑ Deterioration of the REEL DRIVE BELT.
   ⓒ Deterioration of the FRICTION GEAR ASS'Y felt (torque during playback).
   ⓓ Wear and damage of the COMPL CLUTCH MECHANISM and the reel drive system gears.

Note1 : Items ⓑ, ⓒ and ⓓ require replacement if found defective.

Note2 : The measured value of torque during FF and REW represents the value 2 seconds after starting.

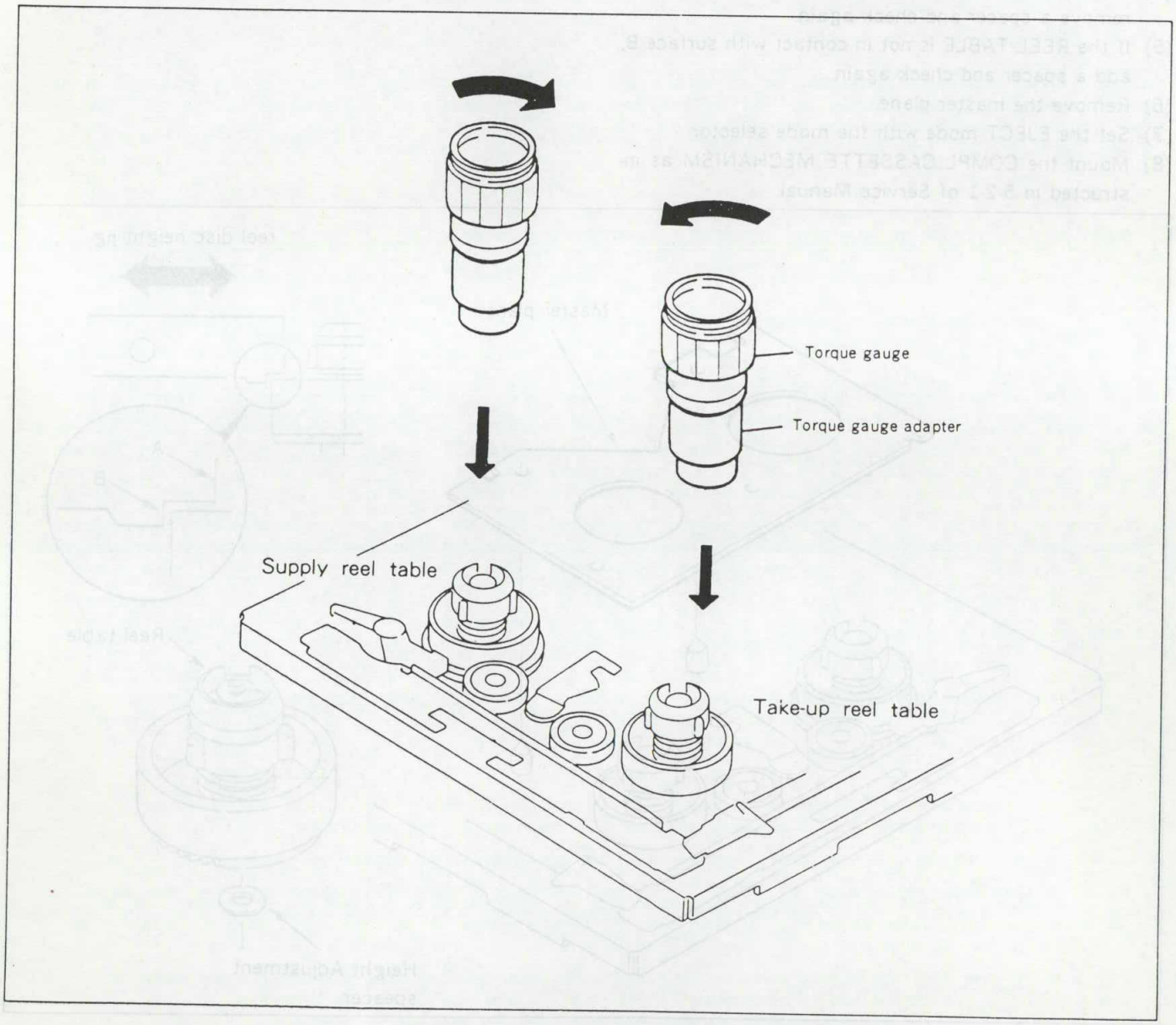

Fig. 6-2-2 Checking REW/FF/PLAY Torque

Published in Heiloo, Holland.

www.freeservicemanuals.info 11/15/15

Digitized by WWW.FREESERVICEMANUALS.INFO

6-3. TENSION POLE (BACK TENSION GUIDE) POSITION ADJUSTMENT AND BACK TENSION TORQUE CHECK

6-3-1. Tension Pole (Back Tension Guide) Position Adjustment (See Fig. 6-3-1.)

1) Remove the COMPL CASSETTE MECHANISM as instructed in 5-2-1 of Service Manual.
2) Set the PLAY mode with the mode selector (VHJ-0050)
3) Confirm that the space between the end of chassis and the Tension arm is from 4mm to 6mm.
4) In case the tension pole is not withim 4-6mm, adjust it by loosening the screw ④ a little and changing the mounting position of the BAND HOLDER ⑤ in the direction of the arrow Ⓐ.
5) Set the EJECT mode with the mode selector.
6) Mount the COMPL CASSETTE MECHANISM as instructed in 5-2-1 of Service Manual.
7) Confirm that back tension torque is within 42± 5gcm, as instructed in 6-3-2 below.

6-3-2. Back Tension Torque Chack (See Fig. 6-3-1.)

1) Attach the cassette torquemeter (VHJ-0016) and set the PLAY mode.
2) Confirm that back tension torque is within 50 ± 10gcm.
3) In case back tension torque dose not meet the above specification, proceed as follows:

ⓐ Clean the portion where the brake band (BAND HOLDER ASS'Y) ⑦ of the SUPPLY REEL ASS'Y ⑥ makes contact.

ⓑ Confirm that the brake band of the BAND HOLDER ASS'Y ⑦ does not make wear and that it is clean. If wear or dirt is found, replace the band holder assembly ⑦ as instructed in 5-7-3 of Service Manual.

ⓒ Raplace the TENSION LEVER ASS'Y SPRING COIL ⑧.

Note : Always follow procedures in 6-3-1. Tension Pole Position Adjustment after performing ⓐ, ⓑ and ⓒ.

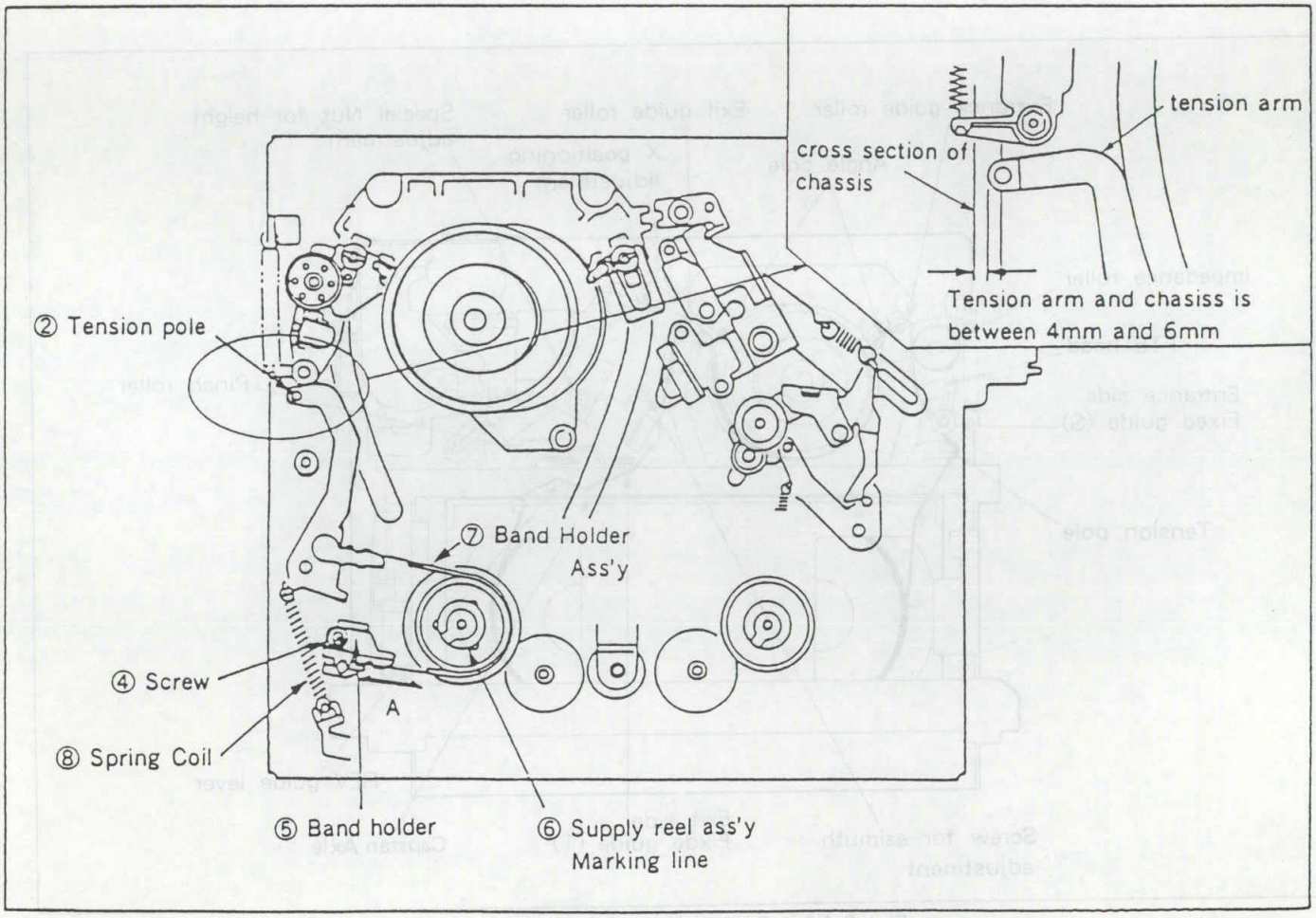

Fig. 6-3-1. Tension Pole Positioning Adjustment

Published in Heiloo, Holland.

www.freeservicemanuals.info 11/15/15

Digitized by WWW.FREESERVICEMANUALS.INFO

6-4. TAPE PATH ADJUSTMENT

The tape path mechanism is precisely adjusted at the factory. Normally no readjustment is required, but checking and/or adjustment is necessary when parts of the tape path mechanism among those shown in the figure below (See Fig. 6-4-1.) have been removed or replaced after a long period of use.
This operation consists of adjusting the various guides so that the tape drawn out from the supply reel runs smoothly along the DRUM (CYLINDER) lead surface. A way of grasping the tape path condition by electronic means is monitoring the video head output envelope waveform with an oscilloscope. However, the fact that visual observation is essential in order to know whether the tape is running through the various guides in a smooth and natural way should be kept in mind when checking and adjusting.
Also remember that the position of tape guides is not greatly affected by the replacement of the UPPER DRUM (UPPER CYLINDER) or the COMPL DRUM (COMPL CYLINDER), provided that it is correctly performed, and that only the replaced parts should be adjusted after replacing a tape guide or COMPL HEAD BRACKET, since the position of the other tape guides shall not change considerably.

6-4-1. Preparations for Adjustment

(1) Clean the tape transport surfaces (See Fig. 6-4-1.).
(2) Connect the oscilloscope. Connect the channel 1 probe to the envelope waveform test point, and the channel 2 probe to the SW30 (RF SW P) test point. During adjustment, apply a trigger to the low side of the SW30 (RF SW P) in order to monitor the waveform output from channel 1 of the video head.

Note : Since oscilloscope connection points differ according to the model, refer to the "Test Point for Tape Path Adjustment" allocation figure in the electric circuit adjustment section of the service manual book.

(3) Use a dentist's mirror for visual observation of tape path condition.
(4) Use an eccentric driver (VHJ - 0003) for adjustment of the guide rollers.
(5) When adjusting height of the fixed guide, guide rollers or COMPL head bracket, turn the special nut or the upper flange clockwise to push the tape downward, and counterclockwise to make the tape rise up.
(6) Do not use the damaged cassette tapes for tape path adjustment.

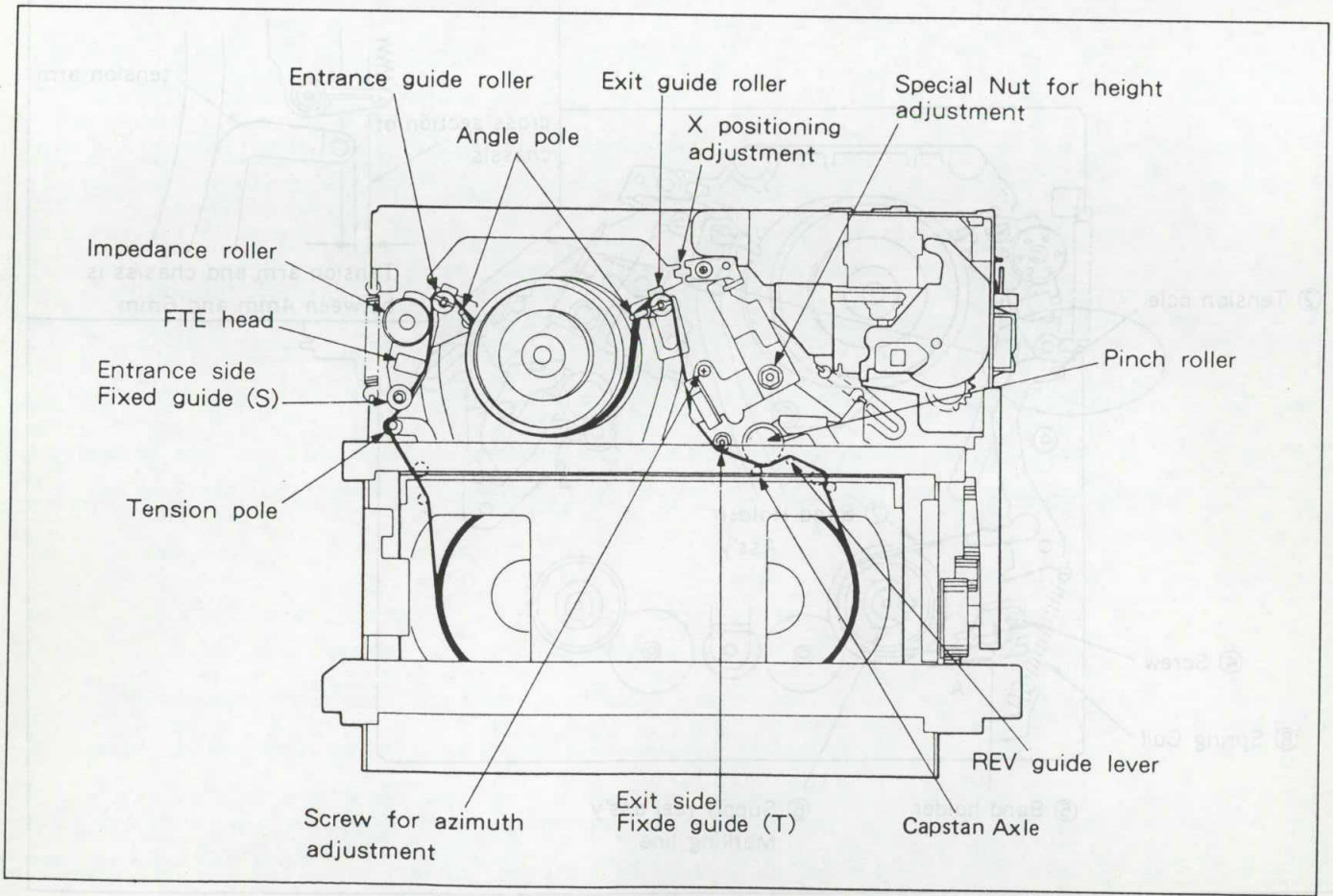

Fig. 6-4-1. Preparation for Adjustment

Published in Heiloo, Holland.

www.freeservicemanuals.info 11/15/15

Digitized by WWW.FREESERVICEMANUALS.INFO

6-4-2. Adjustment by Visual Observation after Guide Roller, COMPL Head Bracket Replacement

Perform this adjustment after removing or replacing any of the above parts. Only for the replaced or removed parts, play back an alignment tape (VHJ-0009) beforehand and adjust height by visual observation.

(1) Guide Rollers (See Fig. 6-4-3.)
The tape should not be curled by the guide roller upper and lower flanges. It should also run smoothly, without moving up and down on the DRUM (CYLINDER) lead surface.

Note : An excessive guide roller pressure may cause tape damage.

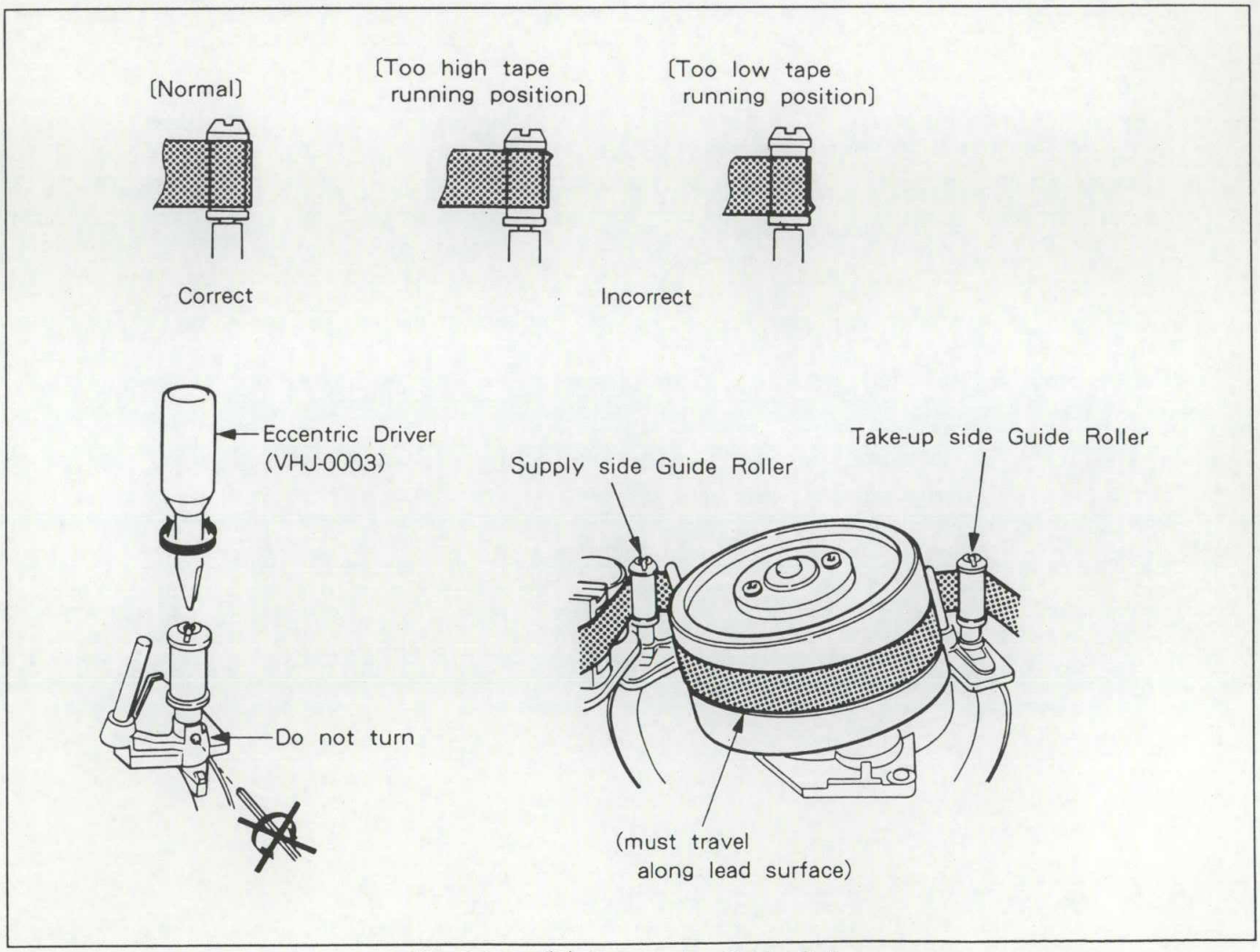

Fig. 6-4-2. (2) Pre-set for Guide Roller

Published in Heiloo, Holland.

www.freeservicemanuals.info

Digitized by WWW.FREESERVICEMANUALS.INFO

(2) COMPL Head Bracket (ACE Head) (See Fig. 6-4-3.)
Adjust the special nut so that the tape edge runs between the audio head upper end and the control head lower end. Gaps A and B should be of about the same width. Since at this point it is only required that the control signal is picked up and the servo circuit works normally, no adjusting screws except the COMPL head bracket special nut should be touched.

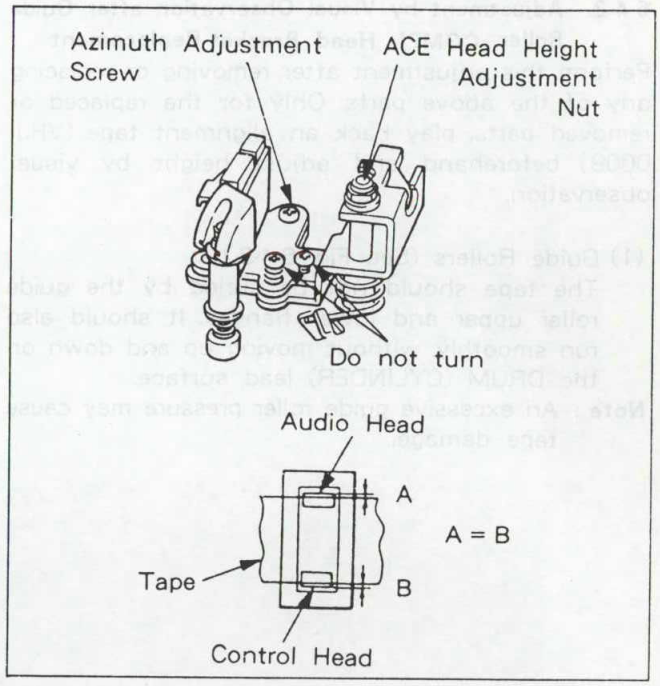

Fig. 6-4-3. (3) Pre-set for Compl Head Bracket

Published in Heiloo, Holland.

www.freeservicemanuals.info 11/15/15

Digitized by WWW.FREESERVICEMANUALS.INFO

6-4-3. Guide Roller Adjustment (See Fig. 6-4-4.)

1) Play back the alignment tape (VHJ-0009), press the tracking control key and adjust the envelope waveform to the maximum level.
2) Loosen the entrance and exit guide rollers by rotating them counterclockwise, then rotate them clockwise alternately until they are fastened and a flat video output waveform is obtained.
3) Confirm that the envelope waveform is not deformed, and check visually that no curling occurs at the guide roller upper and lower flanges.
4) Press the tracking control key and set the envelope waveform level to approx. 50% of the maximum. In this condition, confirm whether the envelope waveform is flat. It will not, showing valleys or peaks at the first half (entrance) or second half (exit), if the guide roller pressure is excessive or insufficient.
   In case there is unevenness in the first half (entrance), adjust the entrance side guide roller. If the second half (exit) shows trouble, adjust finely the exit side guide roller.

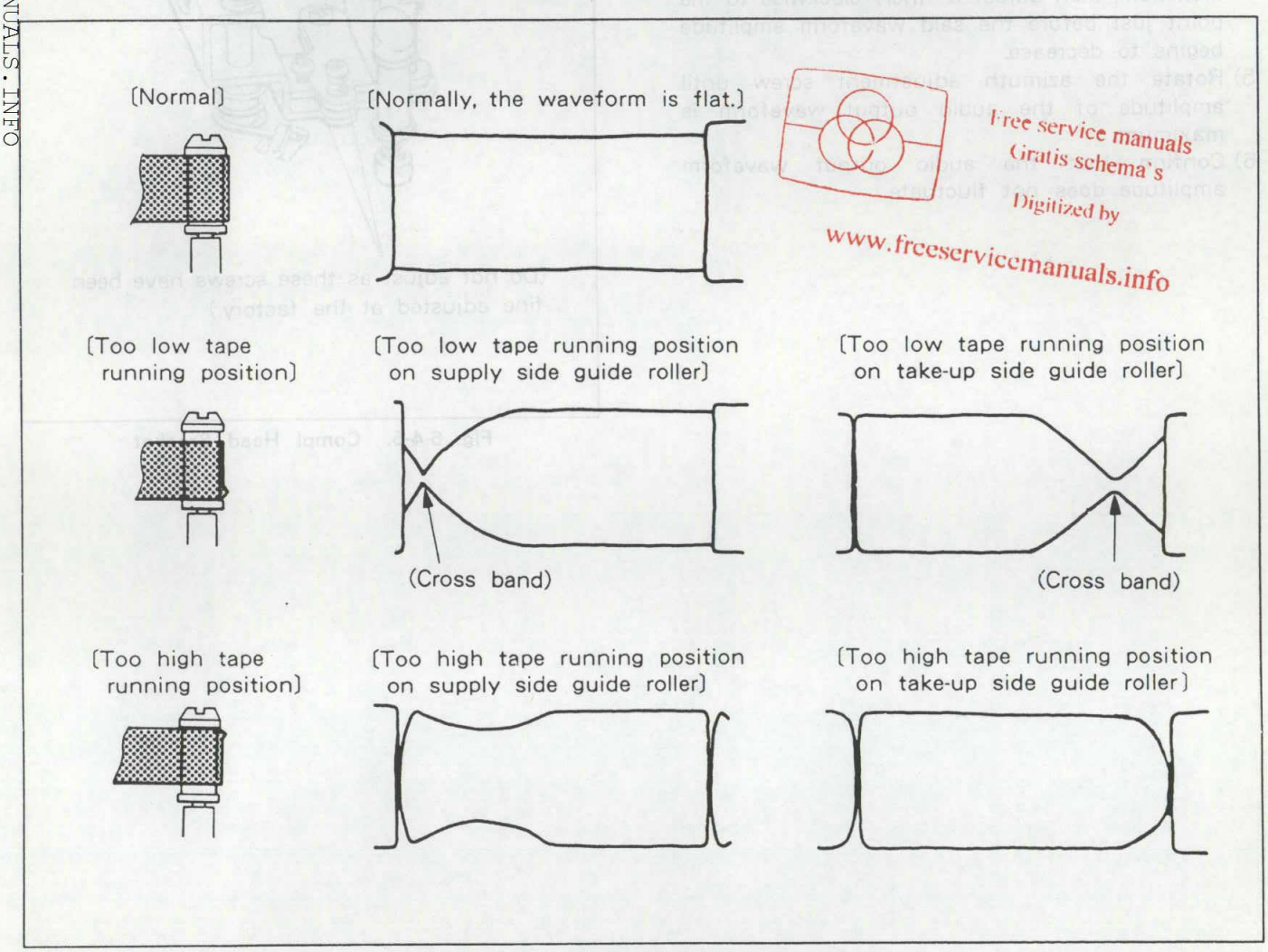
(Normal)
(Normally, the waveform is flat.)
(Too low tape running position)
(Too low tape running position on supply side guide roller)
(Too low tape running position on take-up side guide roller)
(Cross band)
(Cross band)
(Too high tape running position)
(Too high tape running position on supply side guide roller)
(Too high tape running position on take-up side guide roller)

Free service manuals
Gratis schema's
Digitized by
www.freeservicemanuals.info

Fig. 6-4-4. Guide Roller Adjustment

Published in Heiloo, Holland.

www.freeservicemanuals.info 11/15/15

Digitized by WWW.FREESERVICEMANUALS.INFO

6-4-4. COMPL Head Bracket (ACE Head) Adjustment

(1) Height Adjustment and Azimuth Adjustment (See Fig. 6-4-5.)

1) Load the alignment tape (VHJ-0009) and set the PLAY mode.
2) Monitor the audio output waveform with the oscilloscope.
3) Rotate the azimuth adjustment screw until the audio output waveform amplitude is maximum.
4) After loosening the ACE head height adjustment special nut, rotate it slowly clockwise until amplitude of the audio output waveform is maximum, then adjust it finely clockwise to the point just before the said waveform amplitude begins to decrease.
5) Rotate the azimuth adjustment screw until amplitude of the audio output waveform is maximum.
6) Confirm that the audio output waveform amplitude does not fluctuate.

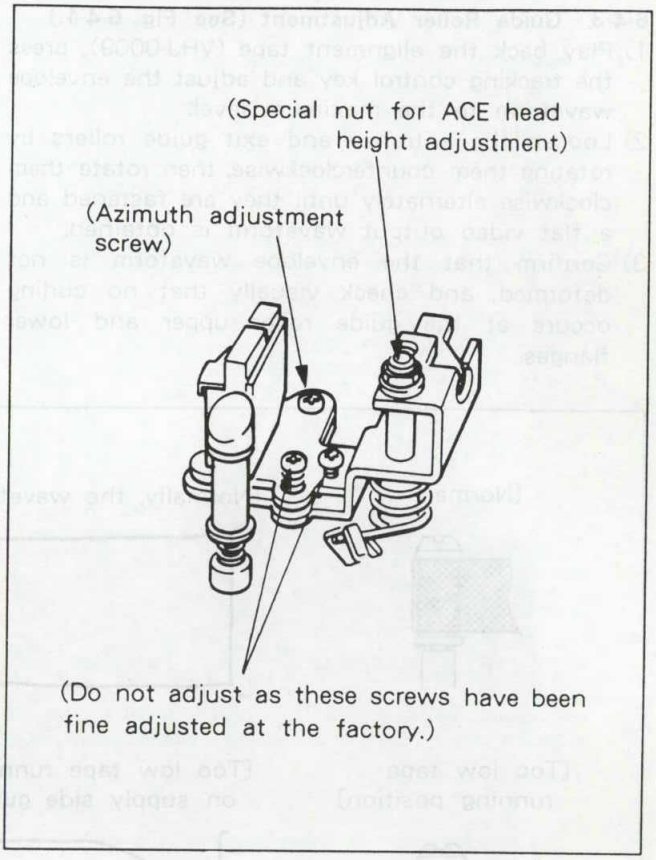
(Special nut for ACE head height adjustment)
(Azimuth adjustment screw)
(Do not adjust as these screws have been fine adjusted at the factory.)

Fig. 6-4-5. Compl Head Bracket

Published in Heiloo Holland.

www.freeservicemanuals.info 11/15/15

Digitized by WWW.FREESERVICEMANUALS.INFO

(2) Tracking (X Value) Adjustment (See Fig. 6-4-6.)

1) Load the alignment tape (VHJ-0009) and set the PLAY mode.
2) Set tracking to the center position with the tracking control key (See Note below).
3) Rotate the stopper bracket fixing screw 180° counterclockwise.
4) Monitor the video head output envelope waveform with the oscilloscope.
5) Adjust the stopper bracket position so that amplitude of the envelope waveform becomes maximum at the tracking center and the envelope waveform amplitude changes by the same amount when shifting the tracking center by pressing the plus (+) and minus (−) tracking control keys.
6) Tighten the fixing screw.
7) (Model for LP mode tape speed capability)
Playback the alignment tape (VHJ-0052) and set the tracking to the center using a tracking control key.
Then confirm that the playback picture on screen is normal. If not, Make readjustment by referring to items 1) through 7). To readjust, playback VHJ-0009 and finely adjust the position of the stopper bracket within the range in which the amplitude of the envelope waveform can be held to a maximum.
8) Perform servo circuit PB PHASE (Switching position) adjustment.

Note : For models equipped with auto tracking, always set to the manual tracking mode before adjustment. To confirm the tracking center position, press the tracking keys (+, −) and observe the front panel clock display. It will read "T − : −" at the tracking center, "T − : , T − − : " when keeping the minus (−) key pressed, and "T : −, T : − −" when keeping the plus (+) key pressed. The time indication will be restored 2 to 3 seconds after the tracking keys are released.

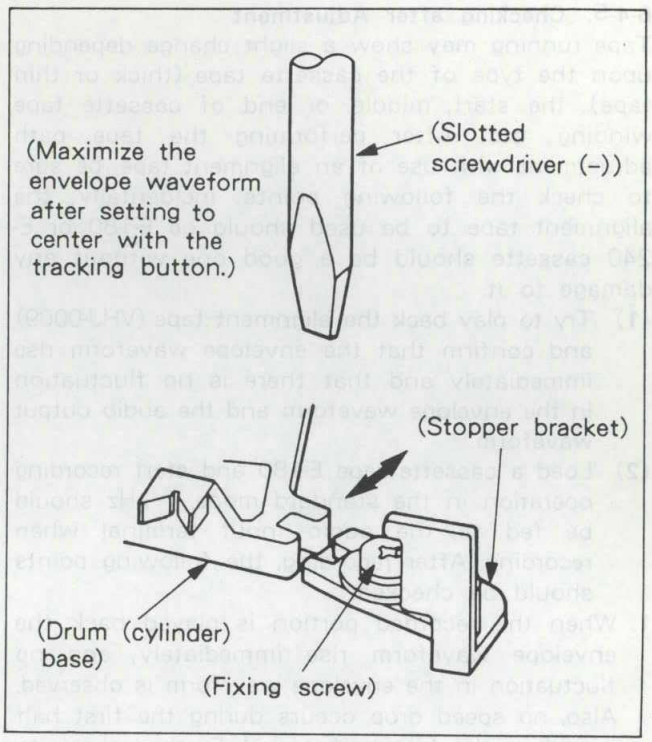
(Maximize the envelope waveform after setting to center with the tracking button.)
(Slotted screwdriver (−))
(Stopper bracket)
(Drum (cylinder) base)
(Fixing screw)

Fig. 6-4-6.

Published in Heiloo, Holland.

www.freeservicemanuals.info 11/15/15

Digitized by WWW.FREESERVICEMANUALS.INFO

6-4-5. Checking after Adjustment

Tape running may show a slight change depending upon the type of the cassette tape (thick or thin tape), the start, middle, or end of cassette tape winding, etc. After performing the tape path adjustment with use of an alignment tape, be sure to check the following points. Incidentally, the alignment tape to be used should be E-180 or E-240 cassette should be a good one without any damage to it.

(1) Try to play back the alignment tape (VHJ-0009) and confirm that the envelope waveform rise immediately and that there is no fluctuation in the envelope waveform and the audio output waveform.

(2) Load a cassette tape E-180 and start recording operation in the standard mode. 1 kHz should be fed to the audio input terminal when recording. After recording, the following points should be checked.

1. When the recorded portion is played back, the envelope waveform rise immediately, and no fluctuation in the envelope waveform is observed. Also, no speed drop occurs during the first half period or the last half period. Further, check to be sure that no fluctuation occurs in the audio waveform. Also confirm that neither the tape curling or derailing is caused on the upper or lower flange and the on the read side of the drum.
2. Confirm that no tape curling or derailing occurs in the upper or lower flange of each tape guide and the read side of the drum during each mode of operation, namely, FF, REW, F. SEARCH, and R. SEARCH.
3. Confirm that the envelope waveform rise immediately after changing the mode directly to the PLAY from each mode of FF, REW, F. SEARCH, R. SEARCH, or POWER OFF (INITIAL) and that no tape curling or derailing occurs in the upper or lower flange of the each tape guide and on the read side of the drum.

(3) Load a E-240 cassette tape and perform recording operation in the SP mode. 1 kHz should be fed to the audio input terminal when recording. Now, confirm that the envelope waveform rise immediately upon starting the playback of the recorded portion, and that neither fluctuation in the envelope waveform nor a speed drop occurs during the first half period or the last half period. Also confirm that no tape curling or derailing is caused in the upper or lower flange of each tape guide and on the drum lead surface.

(4) Perform recording for 60 seconds in the SP mode at the start of E-240 cassette winding. Play back the recorded portion and repeat the F.SEARCH ↔ R.SEARCH ten times, following which confirm that no damage is done to the tape edge. If any damage is found on the tape edge, a proper step must be taken as below depending upon the symptom obserbed.

Published in Heiloo, Holland.

www.freeservicemanuals.info 11/15/15

Digitized by WWW.FREESERVICEMANUALS.INFO

4. If damage in the form of a sawtooth or a streak is found on the tape edge
   1) Check if a large amount of magnetic particles is adhered to the exit-side guide roller. If magnetic particles cannot be removed in spite of repeated cleaning, the guide roller must be replaced.
   2) Confirm if the tape is held too tightly by the exit-side guide roller, or if the last half of the envelope waveform is flat. If the type is found held too tightly, readjustment should be made by referring to 6-4-3.
   3) Recheck if the damage is still caused on the E-240 tape.
      If similar damage is still found on the tape, the exit-side guide roller should be loosened about 20° counterclockwise.
   4) Check once again that no fluctuation is caused in the envelope waveform or the audio waveform by loosening the exit-side guide roller. To do this, record and play back the E-240 cassette tape.

(5) Perform recording for 60 seconds in the SP mode at the near end of the E-240 cassette tape. Play back the recorded portion and repeat the F. SEARCH ↔ R. SEARCH ten times, following which a check should be made to see if damage is still done to the tape edge. If a damage in the form of a sawtooth or a streak is still occurred on the tape edge by the upper lounge of entrance side guide roller, proceed with the step given below.
   1) Check if a large amount of magnetic particles is adhered to the entrance-side guide roller. If the magnetic particles cannot be removed in spite of repeated cleaning, the guide roller must be replaced with new one.
   2) Confirm if the tape is held too tightly by the entrance-side guide roller, or if the first half of the envelope waveform is flat. If the tape is found held too tightly, readjustment should be made by referring to 6-4-3.
   3) Recheck if the damage is still caused on the E-240 tape.
      If the damage is still found on the tape, the entrance-sideguide roller should be loosened aboud 20° counterclockwise.
   4) Check once again that no fluctuation is caused in the envelop waveform or the audio waveform by looseving the entrance-side guide roller. To do this, record and play back the E-240 cassette tape.

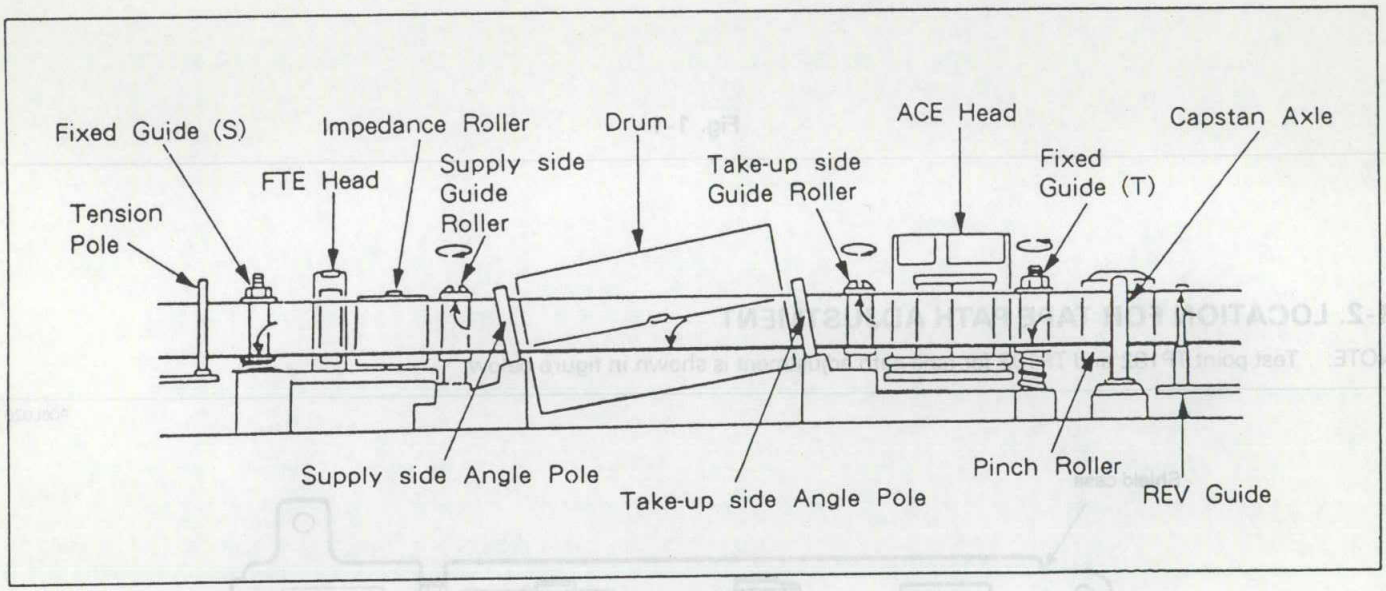

Fig. 6-4-7.

Published in Heiloo, Holland.

www.freeservicemanuals.info 11/15/15

Digitized by WWW.FREESERVICEMANUALS.INFO

SECTION 7
ELECTRICAL ADJUSTMENTS

1. CIRCUIT BOARD LOCATIONS

1-1. MAIN BOARDS

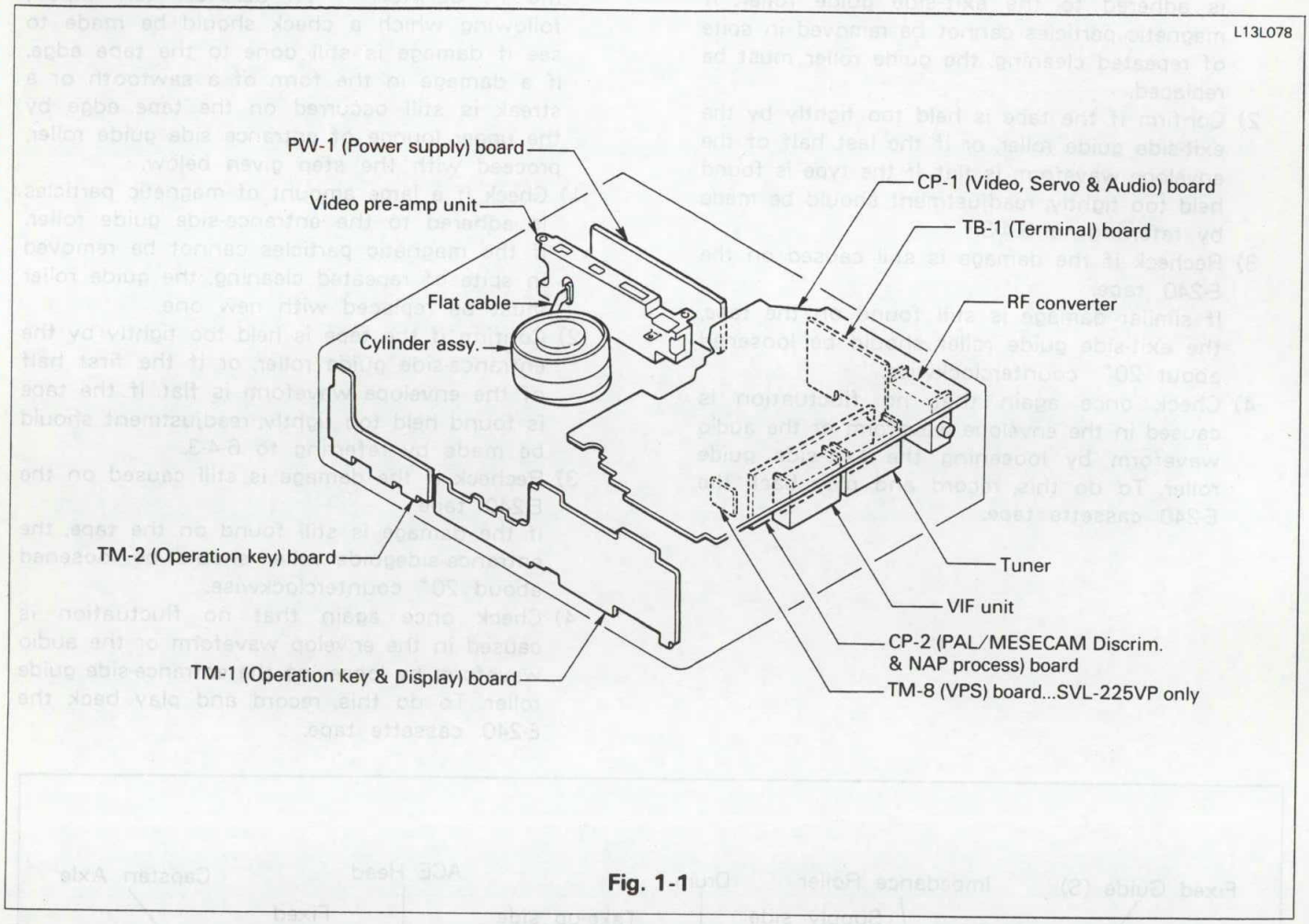

Fig. 1-1

1-2. LOCATION FOR TAPE PATH ADJUSTMENT

NOTE: Test point TP182 and TP183 for tape path adjustment is shown in figure below.

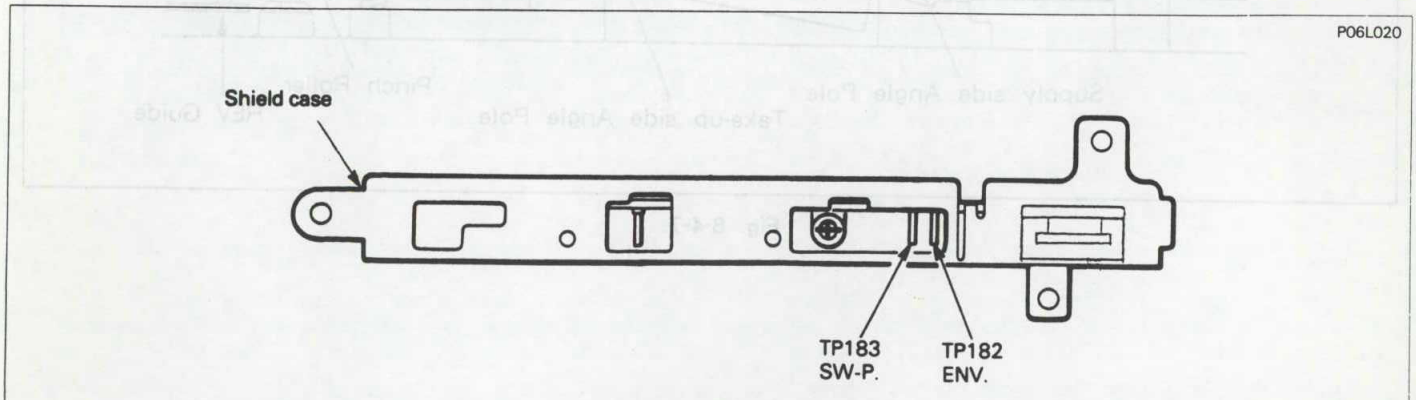

Fig. 1-2 Video pre-amp unit

Published in Heiloo, Holland.

www.freeservicemanuals.info 11/15/15

Digitized by WWW.FREESERVICEMANUALS.INFO

2. ELECTRICAL ADJUSTMENT

2-1. PREPARATION

2-1-1. EQUIPMENT

- Colour TV monitor
- PAL Colour-bar generator (with RF and LINE OUTPUT)
- Audio signal generator
- Oscilloscope (dual trace; frequency response: 10MHz or more; probe: 10:1)
- Frequency counter (countable to 10MHz or higher)
- Digital voltmeter
- AC voltmeter
- In/output probes
- Relay jig (VHJ-0065) 5-wire cable for Pre-amp unit

[Allgnment Tape (MH-2)] (H-7099-052-H) (PAL)

In making the adjustment, an alignment tape for VHS(PAL). If a model is specified, be sure to use a tape of the model. If not either model of a tape can be used.

	Time	Video signal	Audio signal
1	10 minutes	Stair-step	6 kHz
2	5 minutes	–	3 kHz
3	10 minutes	Color bar	1 kHz
4	3 minutes	RF sweep	–

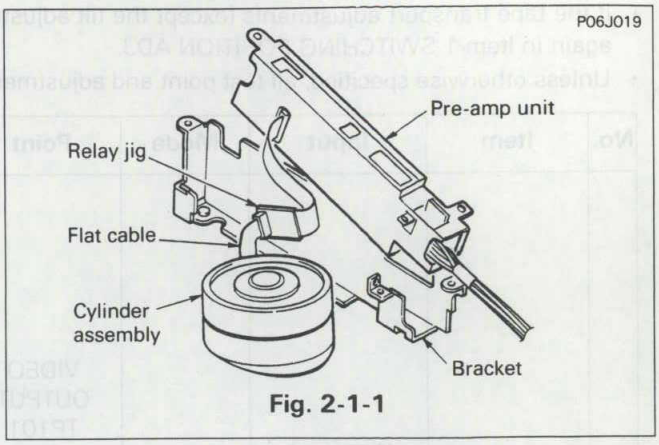

Fig. 2-1-1

NOTE: When repairing or adjusting the Pre-amp unit, be sure to make contact an end of the Shield case with Bracket of the Pre-amp unit to maintain the shield effect. If the Pre-amp unit does not contact, image can be obtained.

CAUTION: Be sure that the Relay jig does not have touch with video head or the upper cylinder assembly.

2-1-2. SET-UP

Because the RF input signal is used for circuit adjustments, connect the colour-bar generator to the ANT IN terminal of the VCR. The RF input signal is processed by the tuner and IF circuit. It is improtant that the video output signal of the IF circuit satisfies the items shown in figure below. Connect the oscilloscope to the VIDEO OUTPUT terminal of the video circuit and terminate with a 75Ω load, and then check the video output signal.

- The amplitude of the sync signal should be approximately 0.3 Vp-p.
- The amplitude of the video signal should be approximately 0.7 Vp-p.
- While observing the oscilloscope or TV screen, make fine-tuning adjustments so that the colour burst amplitude is approximately 0.3 Vp-p.
- Check to be sure that there is no spike noise in the sync part of the horizontal sync signal.

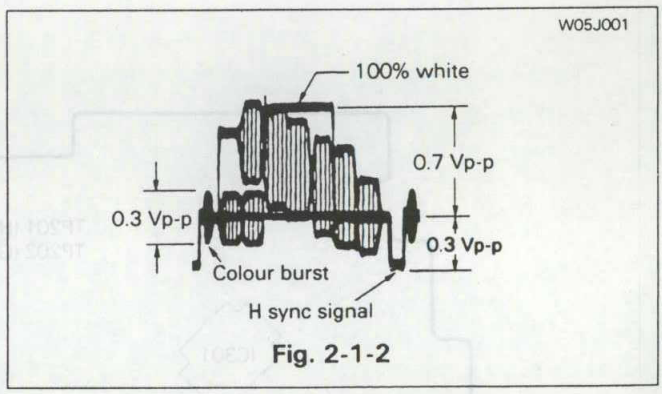

Fig. 2-1-2

Published in Heiloo, Holland.

www.freeservicemanuals.info 11/15/15

Digitized by WWW.FREESERVICEMANUALS.INFO

2-2. SERVO CIRCUIT ADJUSTMENT

- These adjustments should be carried out upon completion of the tape transport adjustments.
- If the tape transport adjustments (except the tilt adjustment) are carried out after these adjustments, follow the procedures again in Item 1 SWITCHING POSITION ADJ.
- Unless otherwise specified, all test point and adjustment location on the CP-1 board.

No.	Item	Input	Mode	Point	Location	Remark
1	SWITCHING POSITION	Alignment cassette (MH-2)	PLAY	VIDEO OUTPUT TP101 RF SW pulse TP183 (Video pre-amp unit)	VR351	W25S002 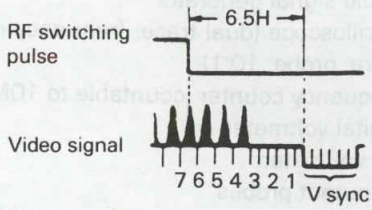 1. Press the tracking control buttons (+) and (–) simultaneously to the tracking center position: (indicator panel displayed "T —:— "). 2. Set the COLOR SYSTEM switch to PAL position, and play back the Alignment cassette. 3. Trigger at the falling edge of the RF SW pulse, and adjust VR351 so that the front edge of the V sync signal comes 6.5 ± 0.2H later than falling edge of the RF SW pluse. 4. Confirm that the phase difference between the switching positions of CH-1 and CH-2 is within 0.5H.

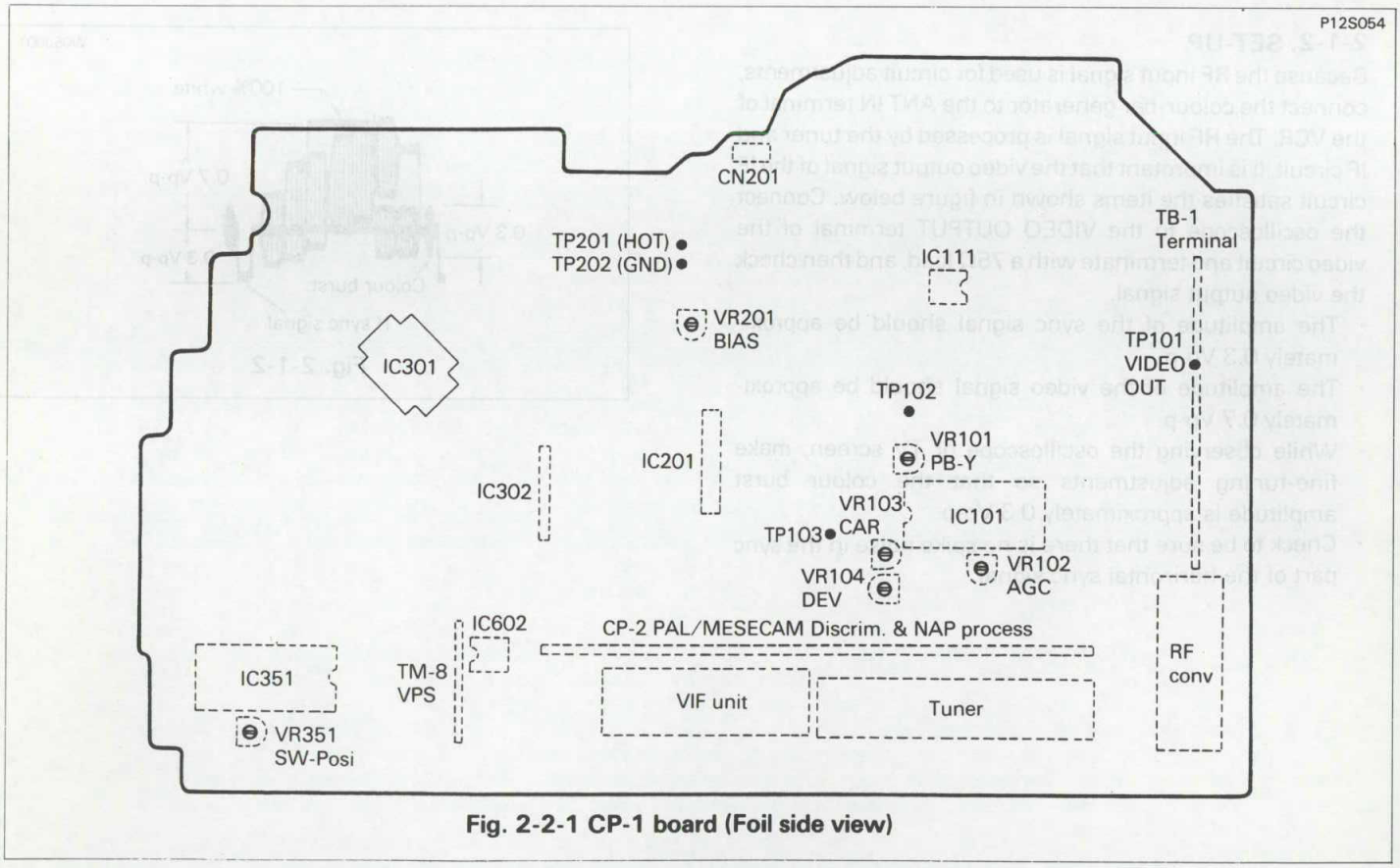

Fig. 2-2-1 CP-1 board (Foil side view)

Published in Heiloo, Holland.

www.freeservicemanuals.info 11/15/15

Digitized by WWW.FREESERVICEMANUALS.INFO

2-3. VIDEO CIRCUIT ADJUSTMENT

Use the Relay jig mentioned in the 2-1. PREPARATION to provide simple adjustment of the Video Pre-amp unit.
Before these adjustment set the COLOR SYSTEM switch to PAL position.
Unless otherwise specified, all test point and adjustment location on the CP-1 board.

No.	Item	Input	Mode	Point	Location	Remark
1	AGC LEVEL	Colour bar (100% white level) from Colour bar generator	E-E	TP102	VR102	W25V030 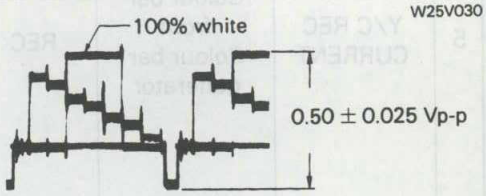 1. Terminate VIDEO OUTPUT terminal with a 75 ohms. 2. Adjust VR102 so that the level is 0.50 ± 0.025 Vp-p.
2	PB-Y LEVEL	Alignment cassette (MH-2)	PLAY	VIDEO OUTPUT TP101	VR101	W25V001 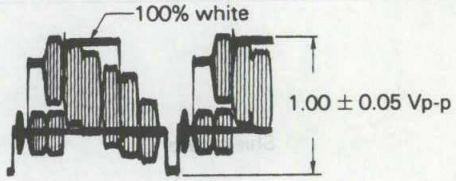 1. Terminate VIDEO OUTPUT terminal with a 75 ohms. 2. Adjust VR101 so that the level is 1.00 ± 0.05 Vp-p.
3	CARRIER SET	Colour bar (100% white level) from Colour bar generator ↓ No-signal	REC	TP103	VR103	1. Input the PAL colour bar signal to VIDEO INPUT terminal. 2. Press the INPUT SELECT button to the "AU" indicator lights and place in the REC mode. 3. After removing the first colour bar signal input from the video input terminal, immediately adjust VR103 so that the frequency becomes 3.83 ± 0.05 MHz.
4	DEVIATION	Colour bar (100% white level) from Colour bar generator	REC (Adjustment) ↓ PLAY (Check)	VIDEO OUTPUT TP101	VR104	W25W001 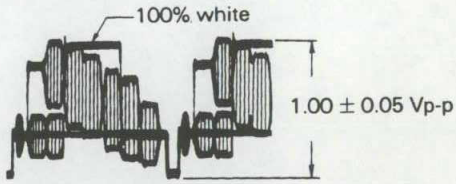 1. Terminate VIDEO OUTPUT terminal with a 75 ohms. 2. Insert the blank tape to the VCR and record colour bar signal. 3. Playback the recorded part, and check that the level is 1.00 ± 0.05 Vp-p. 4. If the adjustment value is not satisfactory, adjust VR104 and repeat step 3.

Published in Heiloo, Holland.

www.freeservicemanuals.info 11/15/15

Digitized by WWW.FREESERVICEMANUALS.INFO

No.	Item	Input	Mode	Point	Location	Remark
5	Y/C REC CURRENT	Colour bar from Colour bar generator	REC	TP181 (HOT) Shield case (GND) (Video pre-amp unit)	VR182 (Video pre-amp unit)	W25V031 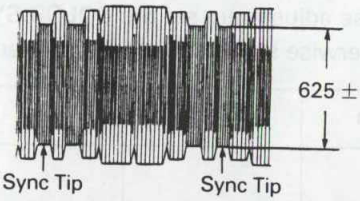 1. Connect the ground of the oscilloscope to the Shield case of Video pre-amp. 2. Press the INPUT SELECT button to the "AU" indicator lights and place in the REC mode. 3. Adjust VR182 so that the luminance signal level at the sync tip is 625 ± 20 mVp-p.

P06V031

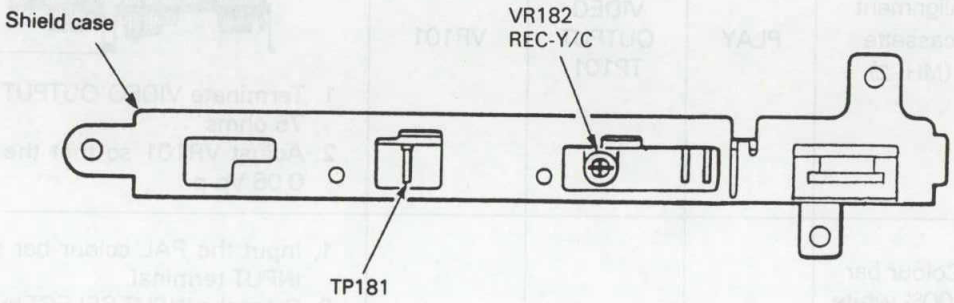

Fig. 2-3-1 Video pre-amp unit

www.freeservicemanuals.info 11/15/15

Digitized by WWW.FREESERVICEMANUALS.INFO

2-4. AUDIO CIRCUIT ADJUSTMENT

Unless otherwise specified, all test point and adjustment location on the CP-1 board.

No.	Item	Input	Mode	Point	Location	Remark
1	BIAS LEVEL	No-signal	REC	TP201 (HOT) TP202 (GND)	VR201	1. Press the INPUT SELECT button to the "AU" indicator lights and place in the REC mode without a signal. 2. Adjust VR201 so that the level is 23 mVrms. 3. Confirm that the bias frequency is 70 ± 5 KHz.

2-5. TUNER IF CIRCUIT ADJUSTMENT

There are two of the VIF unit's type and different with the model as shown in figure below.

No.	Item	Input	Mode	Point	Location	Remark
1	RF AGC	TV broadcast	E-E	TV screen	VR611 (VIF unit)	1. Receive the middle electrical field (60 dBμ ~ 80 dBμ) of the TV channel, and slowly turn VR611 from the point where snow-noise is present to the point where it just disappears from the monitor TV. 2. Confirm by monitor TV that there is no beat and saturation (S/N is best point) when receiving any TV channel.

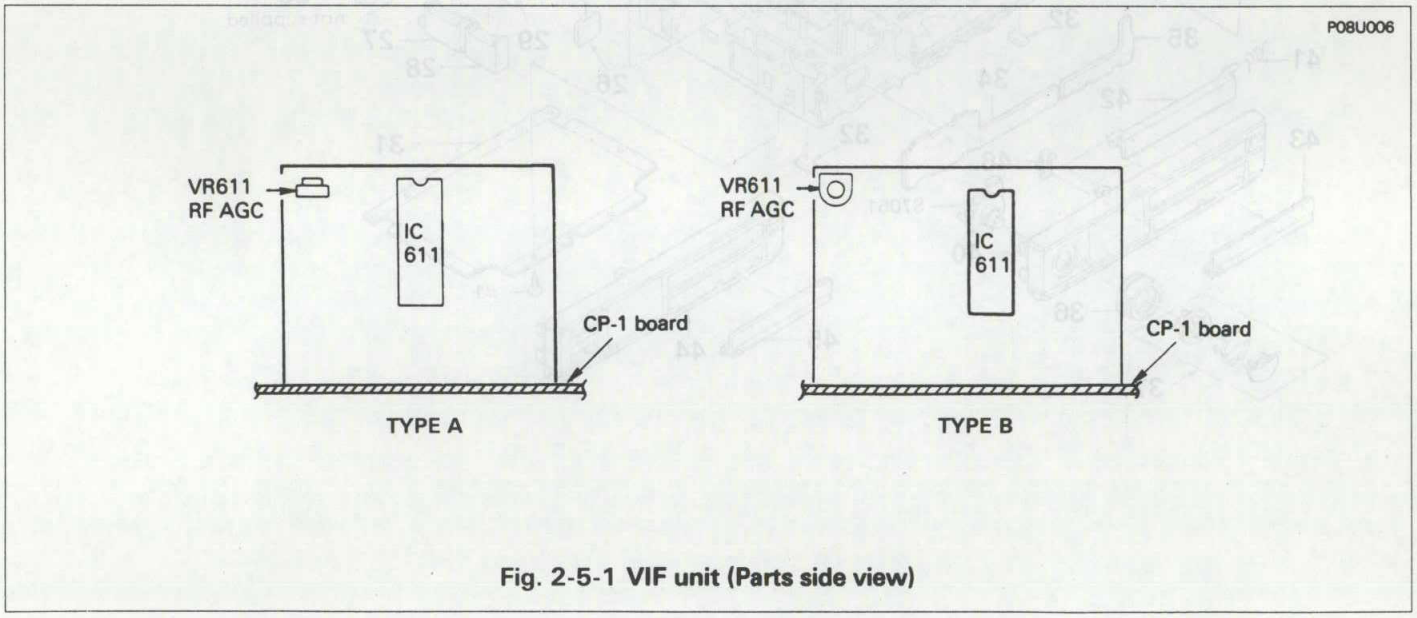

Fig. 2-5-1 VIF unit (Parts side view)

Published in Heiloo, Holland.

www.freeservicemanuals.info 11/15/15

Digitized by WWW.FREESERVICEMANUALS.INFO

SECTION 8
EXPLODED VIEWS

NOTE:

- -XX,-X mean standardized parts, so they may have some difference from the original one.
- Color indication of Appearance Parts.
  Example:
  KNOB,BALANCE (WHITE) . . . (RED)
  ↑ Parts Color ↑ Cabinet's Color
- Items marked "*" are not stocked since they are seldom required for routine service. Some delay should be anticipated when ordering these items.
- The mechanical parts with no reference number in the exploded views are not supplied.
- Hardware (# mark) list is given in the last of this parts list.

The components identified by mark ⚠ or dotted line with mark ⚠ are critical for safety.
Replace only with part number specified.

8-1. CABINET & CHASSIS PARTS

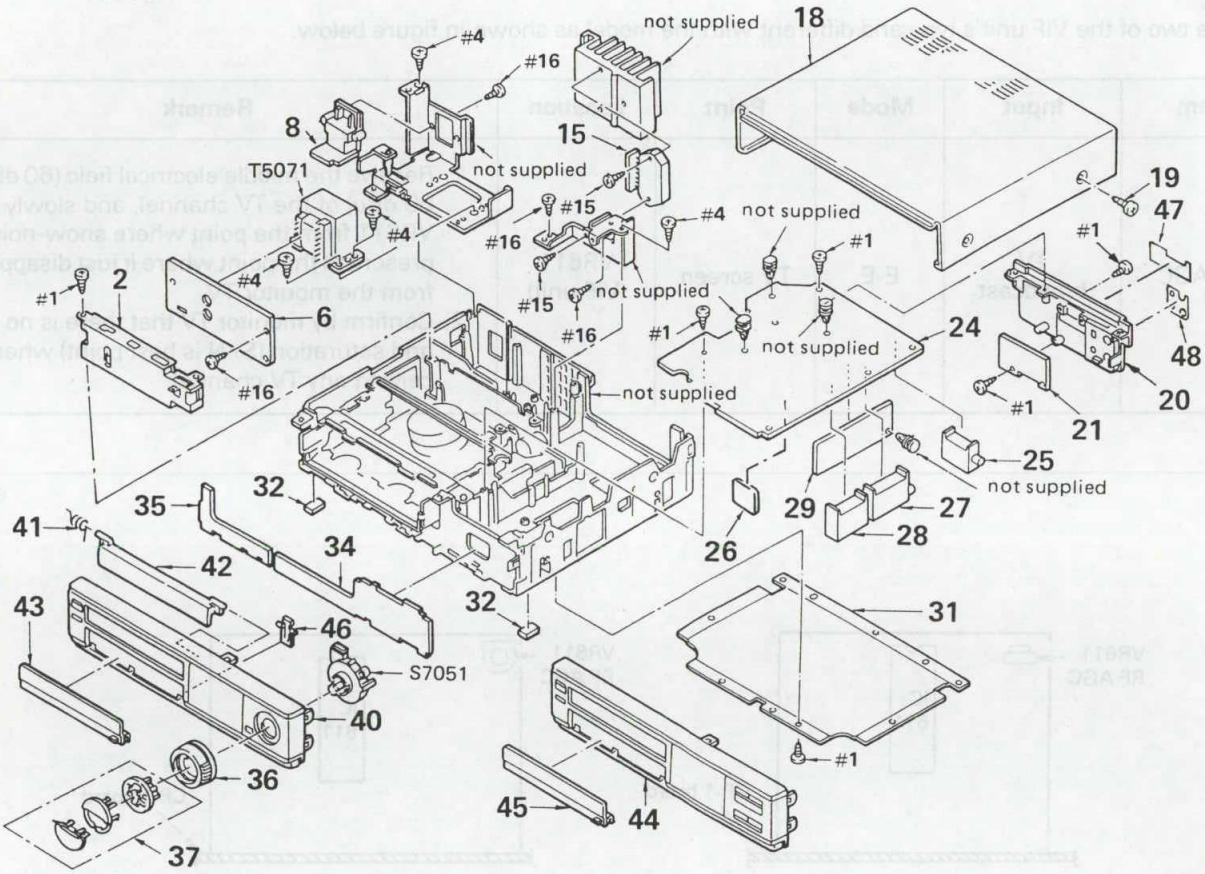

www.freeservicemanuals.info 11/15/15

Digitized by WWW.FREESERVICEMANUALS.INFO

Ref. No.	Part No.	Description	Remark
* 2	A-6756-513-A	VP-1 BOARD, COMPLETE	
* 6	A-6756-515-A	PW-1 BOARD, COMPLETE	(SLV-225VP)
* 6	A-6756-585-A	PW-1 BOARD, COMPLETE	(SLV-125/225/225CP)
* 8	A-6756-517-A	PW-3 BOARD, COMPLETE	
* 15	A-6756-516-A	PW-2 BOARD, COMPLETE	
* 18	3-948-611-01	COVER, TOP	
19	3-740-382-01	+BTS-B S 4X12	
* 20	3-948-625-01	BRACKET, TERMINAL	(SLV-225/225VP)
* 20	3-949-161-01	BRACKET, TERMINAL	(SLV-225CP)
* 20	3-949-294-01	BRACKET, TERMINAL	(SLV-125)
* 21	A-6756-508-A	TB-1 BOARD, COMPLETE	(SLV-225/225VP)
* 21	A-6756-607-A	TB-1 BOARD, COMPLETE	(SLV-225CP)
* 21	A-6756-652-A	TB-1 BOARD, COMPLETE	(SLV-125)
* 24	A-6756-500-A	CP-1 BOARD, COMPLETE	(SLV-225VP)
* 24	A-6756-579-A	CP-1 BOARD, COMPLETE	(SLV-225)
* 24	A-6756-600-A	CP-1 BOARD, COMPLETE	(SLV-225CP)
* 24	A-6756-651-A	CP-1 BOARD, COMPLETE	(SLV-125)
25	1-466-258-11	MODULATOR, RF	
* 26	A-6756-509-A	TM-8 BOARD, COMPLETE	(SLV-225VP)
27	1-693-165-11	TUNER PACK	
28	1-466-741-11	IF PACK	
* 29	A-6756-510-A	CP-2 BOARD, COMPLETE	(SLV-225VP)
* 29	A-6756-554-A	CP-2 BOARD, COMPLETE	(SLV-125/225/225CP)
* 31	3-947-408-01	COVER, BOTTOM	(SLV-125/225/225CP)
* 31	3-948-610-01	COVER, BOTTOM	(SLV-225VP)
* 32	3-942-661-01	STAND, FELT	

Ref. No.	Part No.	Description	Remark
* 34	A-6756-518-A	TM-1 BOARD, COMPLETE	(SLV-225VP)
* 34	A-6756-618-A	TM-1 BOARD, COMPLETE	(SLV-225CP)
* 34	A-6756-634-A	TM-1 BOARD, COMPLETE	(SLV-225)
* 34	A-6756-653-A	TM-1 BOARD, COMPLETE	(SLV-125)
* 35	A-6756-519-A	TM-2 BOARD, COMPLETE	
36	3-944-572-01	RING, SHUTTLE	(SLV-225/225CP/225VP)
37	X-3941-295-1	BUTTON ASSY, FUNCTION	(SLV-225/225CP/225VP)
40	A-6704-616-A	CABINET ASSY, FRONT	(SLV-225VP)
40	A-6704-625-A	CABINET ASSY, FRONT	(SLV-225/225CP)
41	3-942-659-01	SPRING (CASSETTE DOOR)	
42	3-948-604-01	DOOR, CASSETTE	(SLV-225/225CP/225VP)
42	3-948-671-01	DOOR, CASSETTE	(SLV-125)
43	A-6704-617-A	DOOR ASSY, FRONT	(SLV-225VP)
43	A-6704-626-A	DOOR ASSY, FRONT	(SLV-225/225CP)
44	A-6704-649-A	CABINET ASSY, FRONT	(SLV-125)
45	A-6704-650-A	DOOR ASSY, FRONT	(SLV-125)
46	3-740-330-01	LOCK	
* 47	3-948-626-01	PLATE, BACK	(SLV-225/225VP)
* 47	3-949-295-01	PLATE, BACK	(SLV-125)
* 47	3-949-162-01	PLATE, BACK	(SLV-225CP)
* 48	3-948-629-01	PLATE, BACK	
S7051	1-572-662-11	SWITCH, ROTARY (PLAY/STOP/REW/FF)	(SLV-225/225CP/225VP)
⚠T5071	1-450-989-11	TRANSFORMER, POWER	

Note: The components identified by mark ⚠ or dotted line with mark ⚠ are critical for safety.
Replace only with part number specified.

Published in Heiloo, Holland.

www.freeservicemanuals.info 11/15/15

Digitized by WWW.FREESERVICEMANUALS.INFO

8-2. MECHANISM PARTS 1

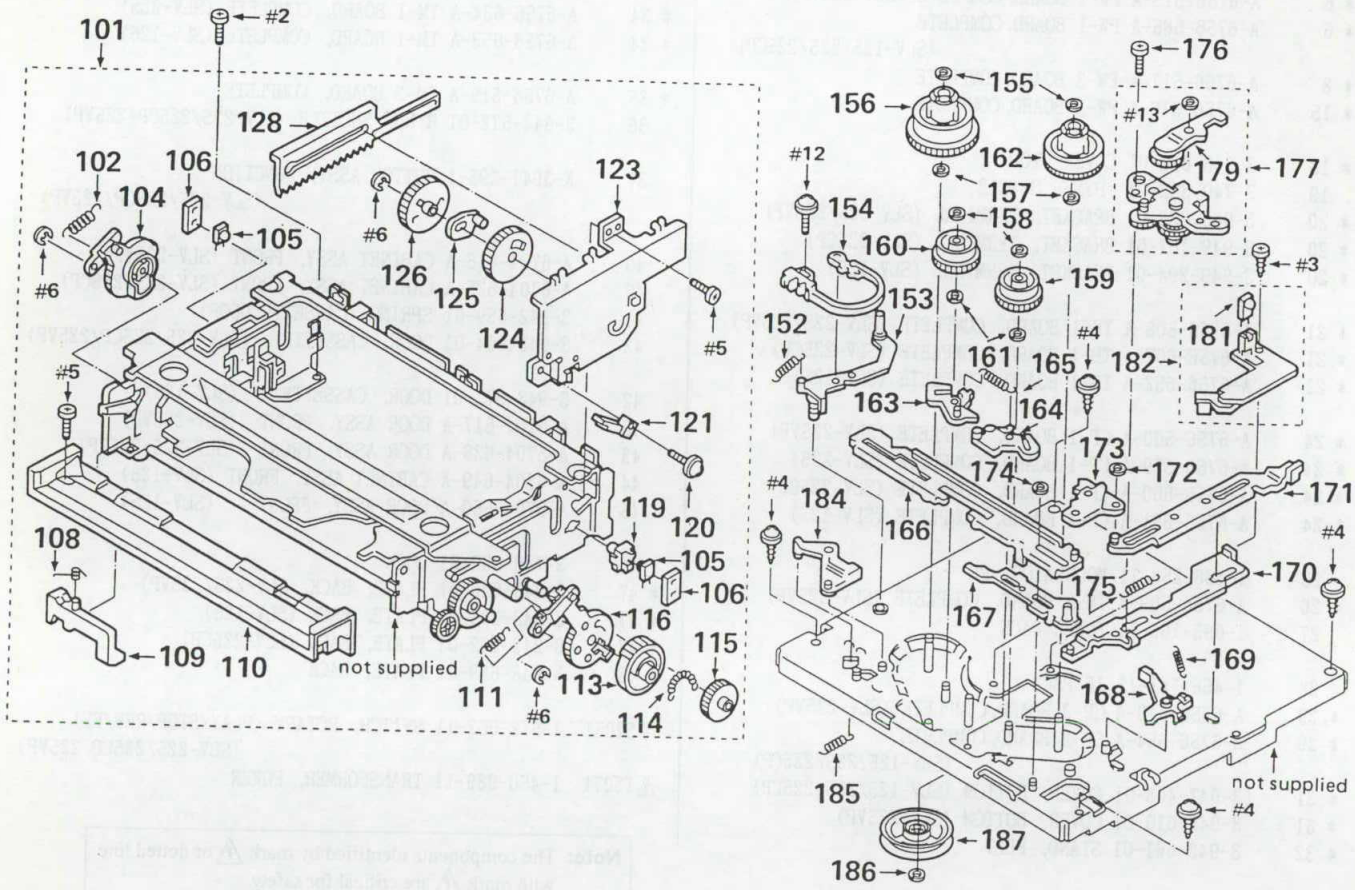

www.freeservicemanuals.info 11/15/15

Digitized by WWW.FREESERVICEMANUALS.INFO

Ref. No.	Part No.	Description	Remark
101	A-6773-733-A	MECHANICAL ASSY, CASSETTE	
102	3-735-720-01	SPRING	
104	3-735-719-01	LEVER (L) ASSY, GEAR	
105	1-808-710-11	PHOTO TRANSISTOR	
106	3-735-734-01	LID	
108	3-942-688-01	SPRING, SAFETY SWITCH	
109	3-942-686-01	LEVER, SAFETY SWITCH	
110	3-735-716-01	FRAME, LOWER	
111	3-735-726-01	SPRING	
113	3-735-724-01	GEAR, MAIN	
114	3-735-725-01	SPRING	
115	3-735-728-01	GEAR, IDLER	
116	3-735-723-01	GEAR ASSY, LEVER	
* 119	3-940-408-01	HOLDER, TRANSISTOR	
120	3-735-775-01	SCREW (2X9), +PSW	
121	3-740-345-01	SPECIAL SWITCH	
123	3-740-342-01	BRACKET, GEAR	
124	3-735-730-01	GEAR, PINION	
125	3-735-732-01	LEVER ASSY, PINION	
126	3-735-731-01	GEAR, LOCK	
128	3-740-344-01	LOCK	
152	3-735-654-01	SPRING	
153	3-740-352-01	LEVER, TENSION	
154	3-735-690-01	HOLDER ASSY, BAND	
155	3-735-755-01	WASHER (DIA. 2.6)	
156	3-948-608-01	REEL (ASSY), SUPPLY	
157	3-735-754-01	WASHER (DIA. 3), ADJUSTMENT	

Ref. No.	Part No.	Description	Remark
158	3-741-401-01	WASHER Y 2.1X6X0.25	
159	3-947-392-01	GEAR, REEL TAKE-UP	
160	3-948-609-01	GEAR, SUPPLY REEL	
161	3-735-750-01	WASHER (DIA. 2.6), SPECIAL	
162	3-948-506-01	REEL (TAKE-UP) (ASSY)	
163	3-735-656-01	BRAKE ASSY, S	
164	3-735-657-01	BRAKE ASSY, T	
165	3-735-658-01	SPRING	
* 166	3-735-661-01	PLATE ASSY, SLIDE	
* 167	3-735-628-01	BRAKE, SLIDE ACT	
168	3-740-349-01	BRAKE SUB T	
169	3-735-665-01	SPRING	
* 170	3-735-626-01	BRAKE (C) ASSY	
* 171	3-735-662-01	PLATE ASSY, SLIDE	
172	3-746-725-01	WASHER, SPECIAL	
173	3-735-663-01	LEVER, CONTROL	
174	3-735-761-01	WASHER (DIA. 2.6)	
175	3-735-627-01	SPRING	
176	3-942-657-01	SCREW (2.6X4), SPECIAL	
* 177	A-6773-689-A	IDLER CLUTCH BOARD, COMPLETE	
179	3-947-394-01	IDLER (ASSY)	
181	1-808-722-11	DIODE LN59	
* 182	A-6756-374-A	MC-4 BOARD, COMPLETE	
184	3-735-655-01	BRAKE SUB, S	
185	3-740-348-01	SPRING	
186	3-948-603-01	WASHER, SPECIAL	
187	3-735-652-01	PULLEY	

Published in Heiloo, Holland.

www.freeservicemanuals.info 11/15/15

Digitized by WWW.FREESERVICEMANUALS.INFO

8-3. MECHANISM PARTS 2

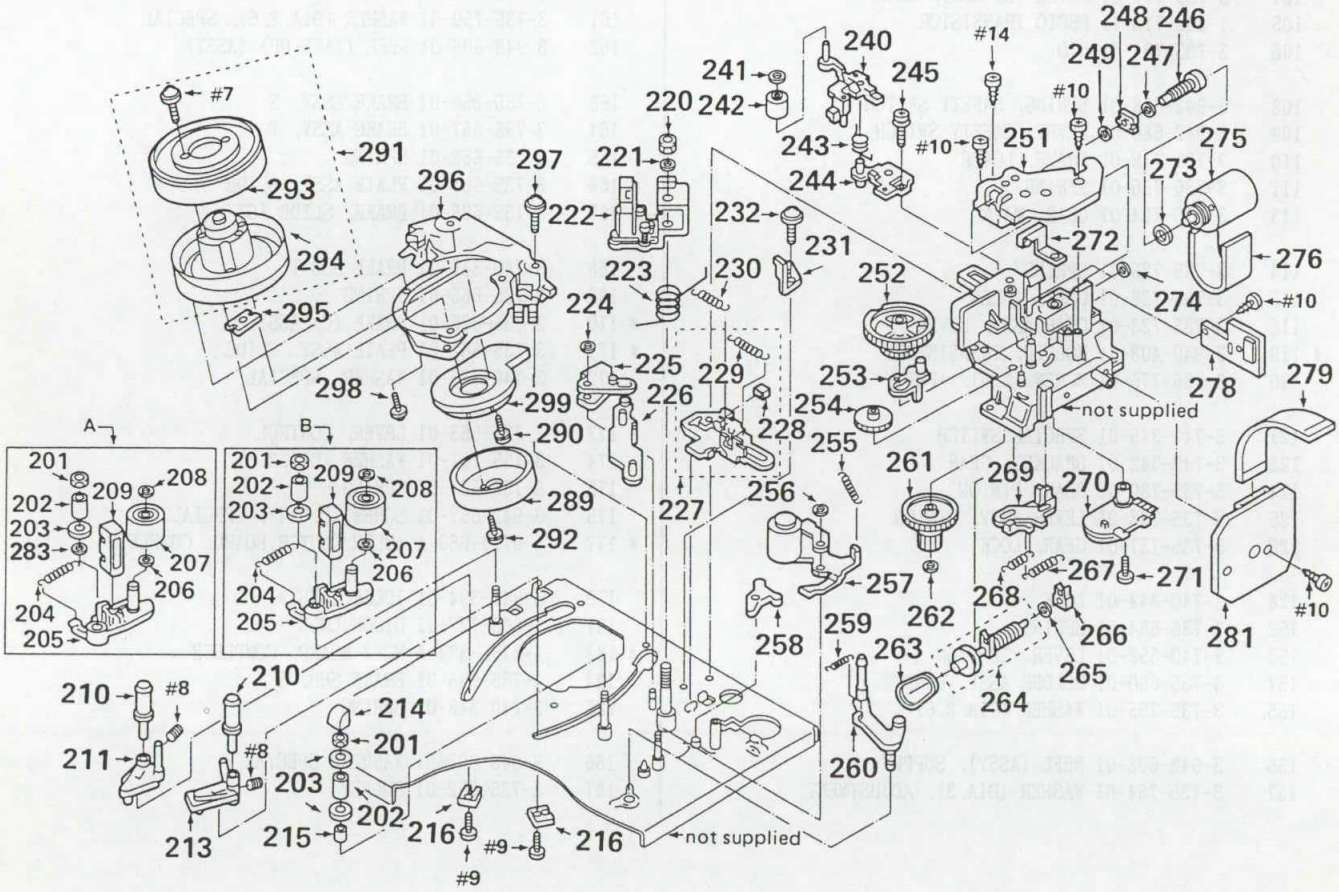

Note: Two Kinds of "LEVER (ASSY), FE HEAD" of Location No.205 are shown in the Fig.A and Fig.B. When the form of "LEVER (ASSY), FE HEAD" is equal to the one in the Fig.A, "WASHER" of Location No.283 is needed. However if the form is equal to the Fig.B, it is not necessary.

www.freeservicemanuals.info 11/15/15

Digitized by WWW.FREESERVICEMANUALS.INFO

Ref.No.	Part No.	Description	Remark
201	3-948-510-01	NUT (HEX 3)	
202	3-942-674-01	GUIDE, TAPE	
203	3-741-408-01	WASHER, SPECIAL	
204	3-735-686-01	SPRING	
205	3-740-353-01	LEVER ASSY, FE HEAD:(A)	
205	3-948-476-01	LEVER ASSY, FE HEAD:(B)	
206	3-735-771-01	WASHER (DIA.2), SPECIAL	
207	3-749-021-01	ROLLER, IMPEDANCE	
208	3-741-407-01	WASHER Y 1.5X4X0.25	
209	3-735-687-01	HEAD, FTE	
210	3-735-630-01	ROLLER ASSY, GUIDE	
211	3-735-629-01	ROLLER (S) ASSY, BASE	
213	3-735-632-01	ROLLER (T) ASSY, BASE	
214	3-943-187-01	CAP	
215	3-942-673-01	SLEEVE	
216	3-735-631-01	PLATE, GUIDE	
220	3-735-682-01	NUT (M5), SPECIAL	
221	3-749-106-01	SPACER	
222	3-735-679-01	BRACKET, COMPL	
223	3-735-680-01	SPRING	
224	3-735-759-01	WASHER (DIA.3)	
* 225	3-735-673-01	PINCH LEVER ASSY	
* 226	3-735-672-01	SLIDE ASSY, PINCH	
227	A-6773-727-A	CAM COMPLETE ASSY, SLIDE	
228	3-735-668-01	DAMPER	
229	3-735-669-01	SPRING	
230	3-735-670-01	SPRING	
231	3-942-071-01	STOPPER, BRACKET	
232	3-741-410-01	SCR PAN+SE+W 2.6X5	
240	3-942-090-01	LEVER ASSY, CLEANER	
241	3-735-758-01	WASHER (DIA.2.6)	
242	3-944-844-01	CLEANER ASSY, ROLLER	
243	3-942-069-01	SPRING	
244	3-942-089-01	BRACKET ASSY, CLEANER	
245	3-741-414-01	SCR PAN+SW+W 2.6X6	
246	3-735-706-01	WORM ASSY, F	
247	3-740-357-01	WASHER	
248	3-735-696-01	HOLDER, WORM	
249	3-741-412-01	WASHER, SPECIAL	
251	3-942-065-01	BRACKET, HOLDER	
252	3-735-703-01	GEAR (F), HELICAL	

Ref.No.	Part No.	Description	Remark
253	3-740-366-01	LEVER, FRONT	
254	3-735-704-01	GEAR	
255	3-735-675-01	SPRING	
256	3-735-757-01	WASHER (DIA.3.6)	
257	3-735-674-01	PINCH ROLLER, COMPL	
258	3-735-671-01	LEVER, ACT BRAKE	
259	3-735-660-01	SPRING	
260	3-749-023-01	GUIDE (REV), LEVER ASSY	
261	3-740-361-01	GEAR, HELICAL	
262	3-740-367-01	WASHER, SLIT	
263	3-735-709-01	BELT (LOADING)	
264	3-740-359-01	LOAD WORM	
265	3-735-774-01	WASHER (DIA.2)	
266	3-741-413-01	HOLDER WORM	
267	3-740-364-01	SPRING	
268	3-740-363-01	SPRING	
269	3-740-362-01	SLIDE, FRONT	
270	1-572-383-11	SWITCH, ROTARY	
271	3-741-411-01	SCR PAN 2.6X13	
272	3-740-354-01	PLATE, NUT	
273	3-735-708-01	DAMPER, WORM	
274	3-740-365-01	DAMPER, MOTOR	
275	3-942-091-01	MOTOR ASSY, THREADING	
276	3-740-358-01	DAMPER, MOTOR	
* 278	1-589-398-11	MOUNTED PC BOARD, MC-3	
279	1-696-736-11	FLAT CABLE, FLEXIBLE 24P	
* 281	1-589-397-11	MOUNTED PC BOARD, MC-2	
283	3-735-770-01	WASHER (DIA.6)	
* 289	1-461-017-11	ROTOR	
290	3-735-779-01	SCREW PAN+SW 2.3X8	
291	A-6050-748-A	CYLINDER(2N2S-V) BOARD, COMPLETE	
292	3-735-778-01	SCREW PAN+SW 2.3X6	
293	3-942-168-01	CYLINDER ASSY (UPR 2N2S-V)	
294	3-940-516-01	CYLINDER ASSY (LOWER 2)	
295	3-949-898-01	SPACER, MOTOR 0.3T	
* 296	3-735-737-01	CYLINDER BASE	
297	3-740-398-01	SCR PAN+FLG 3X6	
298	3-735-777-01	SCREW (2.6X8), +PWH	
299	1-462-284-11	STATOR	

Published in Heiloo, Holland.

www.freeservicemanuals.info 11/15/15

Digitized by WWW.FREESERVICEMANUALS.INFO

8-4. MECHANISM PARTS 3

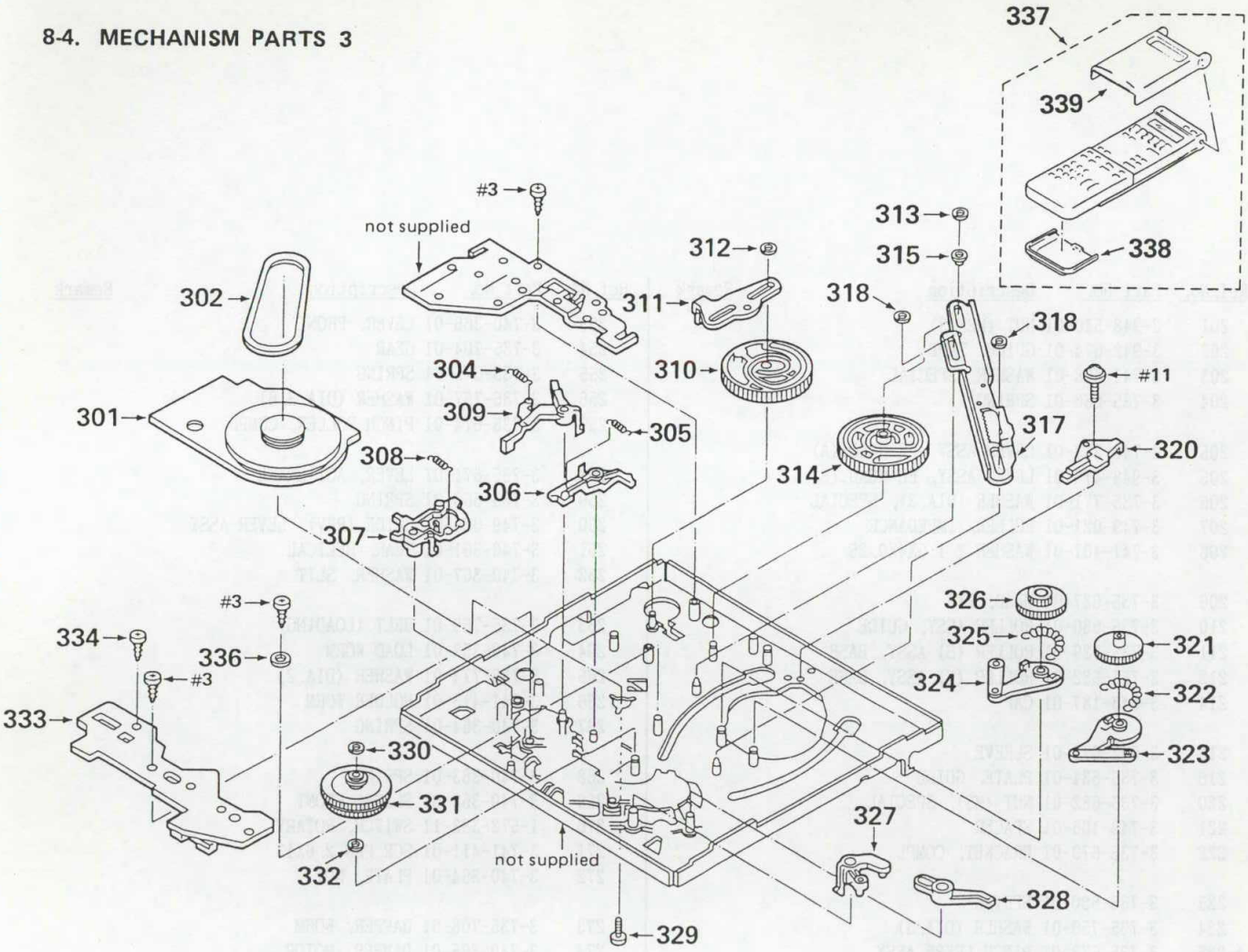

Ref. No.	Part No.	Description	Remark
301	3-740-369-01	MOTOR, CAPSTAN	
302	3-735-691-01	BELT (REEL DRIVE)	
304	3-740-351-01	SPRING	
305	3-735-648-01	SPRING	
306	3-735-647-01	LEVER, CONVERSION CLUTCH	
307	3-947-435-01	CLUTCH (ASSY), LEVER	
308	3-735-646-01	SPRING	
309	3-740-350-01	BRAKE, CAPSTAN	
310	3-735-639-01	CAM, MODE	
* 311	3-735-643-01	PLATE ASSY, CAM	
312	3-735-759-01	WASHER (DIA. 3)	
313	3-735-756-01	WASHER (DIA. 3)	
314	3-947-406-01	CAM, MAIN	
315	3-948-514-01	SPACER, RACK ROAD	
317	3-948-513-01	ROAD (ASSY), RACK	
318	3-735-758-01	WASHER (DIA. 2.6)	
320	3-735-693-01	PLATE ASSY, GROUND	
321	3-746-724-01	ROAD (S), GEAR	
322	3-735-634-01	SPRING	
323	3-735-633-01	LOAD (S) ASSY, LEVER	
324	3-735-636-01	LOAD (T) ASSY, LEVER	
325	3-735-637-01	SPRING (T)	

Ref. No.	Part No.	Description	Remark
326	3-948-511-01	GEAR, ROAD TAKE-UP	
327	3-740-368-01	CONTROL ASSY, LEVER	
328	3-735-766-01	LEVER, RETURN TENSION	
329	3-740-355-01	SCREW (+P) (2.6X5)	
330	3-948-603-01	WASHER, SPECIAL	
331	3-741-402-01	GEAR FRICTION	
332	3-735-760-01	WASHER (DIA. 3), SPECIAL	
333	A-6756-237-A	MC-1 BOARD, COMPLETE	
334	3-740-396-01	SCR STPG BIN 2.6X5	
336	3-749-608-01	WASHER (Z)	
337	1-465-564-61	REMOTE COMMANDER (RMT-V262G)	(SLV-125)
337	1-465-739-31	REMOTE COMMANDER (RMT-V126)	(SLV-225)
337	1-465-739-41	REMOTE COMMANDER (RMT-V126A)	(SLV-225VP)
337	1-465-739-51	REMOTE COMMANDER (RMT-V126D)	(SLV-225CP)
338	2-181-766-01	COVER, BATTERY	(SLV-225/225CP/225VP)
338	4-394-031-01	COVER, BATTERY	(SLV-125)
339	3-949-043-01	DOOR, REMOTE CONTROL	(SLV-225)
339	3-949-044-01	DOOR, REMOTE CONTROL	(SLV-225VP)
339	3-949-045-01	DOOR, REMOTE CONTROL	(SLV-225CP)

www.freeservicemanuals.info 11/15/15

Digitized by WWW.FREESERVICEMANUALS.INFO

SECTION 9
ELECTRICAL PARTS LIST

NOTE:

- Due to standardization, replacements in the parts list may be different from the part specified in the diagrams or the components used on the set.
- -XX,-X mean standardized parts, so they may have some difference from the original one.
- RESISTORS
  All resistors are in ohms
  METAL : Metal-film resistor
  METAL OXIDE : Metal Oxide-film resistor
  F : nonflammable
- Items marked "＊" are not stocked since they are seldom required for routine service. Some delay should be anticipated when ordering these items.
- SEMICONDUCTORS
  In each case,u : μ ,for example :
  uA... : μA..., uPA... : μPA...,
  uPB... : μPB..., uPC... : μPC...,
  uPD... : μPD...
- CAPACITORS
  uF : μF
- COILS
  uH : μH

When indicating parts by reference number, please include the board name.

The components identified by mark ⚠ or dotted line with mark ⚠ are critical for safety.
Replace only with part number specified.

Ref.No.	Part No.	Description			Remark
*	A-6756-500-A	CP-1 BOARD, COMPLETE (SLV-225VP)			
		**********			
*	A-6756-579-A	CP-1 BOARD, COMPLETE (SLV-225)			
		**********			
*	A-6756-600-A	CP-1 BOARD, COMPLETE (SLV-225CP)			
		**********			
*	A-6756-651-A	CP-1 BOARD, COMPLETE (SLV-125)			
		**********			
	1-575-925-11	CORD			
	3-944-257-01	SPRING, PLATE			
		< CAPACITOR >			
C1001	1-126-154-11	ELECT	47uF	20%	6.3V
C1002	1-164-077-11	CERAMIC	220PF	10%	50V
C1003	1-164-060-11	CERAMIC	39PF	5%	50V
C1004	1-162-211-31	CERAMIC	33PF	5%	50V
C1005	1-124-465-00	ELECT	0.47uF	20%	50V
C1006	1-162-195-31	CERAMIC	4.7PF	10%	50V
C1007	1-162-289-31	CERAMIC	390PF	10%	50V
C1009	1-162-195-31	CERAMIC	4.7PF	10%	50V
C1010	1-162-280-31	CERAMIC	82PF	10%	50V
C1011	1-126-157-11	ELECT	10uF	20%	16V
C1012	1-126-157-11	ELECT	10uF	20%	16V
C1013	1-124-465-00	ELECT	0.47uF	20%	50V
C1014	1-161-379-00	CERAMIC	0.01uF	20%	25V
C1015	1-161-494-00	CERAMIC	0.022uF		25V
C1016	1-161-494-00	CERAMIC	0.022uF		25V
C1017	1-162-207-31	CERAMIC	22PF	5%	50V
C1021	1-162-290-31	CERAMIC	470PF	10%	50V
					(SLV-125/225/225VP)
C1021	1-102-820-00	CERAMIC	330PF	5%	50V
					(SLV-225CP)
C1022	1-161-021-11	CERAMIC	0.047uF	10%	25V
					(SLV-125/225/225VP)

Ref.No.	Part No.	Description			Remark
C1022	1-161-772-11	CERAMIC	0.1uF	10%	25V
					(SLV-225CP)
C1023	1-162-219-31	CERAMIC	68PF	5%	50V
C1024	1-162-219-31	CERAMIC	68PF	5%	50V
					(SLV-125/225/225VP)
C1027	1-161-379-00	CERAMIC	0.01uF	20%	25V
C1029	1-127-551-11	ELECT(SOLID)	4.7uF	20%	10V
C1030	1-126-301-11	ELECT	1uF	20%	50V
C1031	1-126-301-11	ELECT	1uF	20%	50V
C1032	1-161-021-11	CERAMIC	0.047uF	10%	25V
C1033	1-161-494-00	CERAMIC	0.022uF		25V
C1034	1-101-890-00	CERAMIC	75PF	5%	50V
C1036	1-126-301-11	ELECT	1uF	20%	50V
C1037	1-126-301-11	ELECT	1uF	20%	50V
C1038	1-161-494-00	CERAMIC	0.022uF		25V
C1039	1-161-021-11	CERAMIC	0.047uF	10%	25V
C1040	1-162-207-31	CERAMIC	22PF	5%	50V
					(SLV-225VP)
C1041	1-126-157-11	ELECT	10uF	20%	16V
C1042	1-161-021-11	CERAMIC	0.047uF	10%	25V
C1043	1-161-379-00	CERAMIC	0.01uF	20%	25V
C1044	1-126-154-11	ELECT	47uF	20%	6.3V
C1045	1-161-379-00	CERAMIC	0.01uF	20%	25V
C1046	1-126-157-11	ELECT	10uF	20%	16V
C1047	1-126-157-11	ELECT	10uF	20%	16V
C1048	1-161-379-00	CERAMIC	0.01uF	20%	25V
C1049	1-162-203-31	CERAMIC	15PF	5%	50V
C1050	1-161-379-00	CERAMIC	0.01uF	20%	25V
C1051	1-162-290-31	CERAMIC	470PF	10%	50V
C1052	1-161-379-00	CERAMIC	0.01uF	20%	25V
C1053	1-161-379-00	CERAMIC	0.01uF	20%	25V
C1054	1-126-154-11	ELECT	47uF	20%	6.3V
C1055	1-161-379-00	CERAMIC	0.01uF	20%	25V
C1056	1-126-154-11	ELECT	47uF	20%	6.3V

Published in Heiloo, Holland.

www.freeservicemanuals.info 11/15/15

Digitized by WWW.FREESERVICEMANUALS.INFO

CP-1

Ref.No.	Part No.	Description				Remark
C1060	1-162-199-31	CERAMIC	10PF	5%	50V	
			(SLV-225VP)			
C1061	1-162-211-31	CERAMIC	33PF	5%	50V	
			(SLV-225VP)			
C1062	1-162-816-11	CERAMIC CHIP	180PF	5%	50V	
			(SLV-225CP)			
C1081	1-162-292-31	CERAMIC	680PF	10%	50V	
C1101	1-124-589-11	ELECT	47uF	20%	16V	
C1102	1-161-379-00	CERAMIC	0.01uF	20%	25V	
C1103	1-126-301-11	ELECT	1uF	20%	50V	
C1105	1-101-880-00	CERAMIC	47PF	5%	50V	
C1106	1-162-195-31	CERAMIC	4.7PF	10%	50V	
C1107	1-101-880-00	CERAMIC	47PF	5%	50V	
C1108	1-126-163-11	ELECT	4.7uF	20%	50V	
C1109	1-161-379-00	CERAMIC	0.01uF	20%	25V	
C1110	1-161-379-00	CERAMIC	0.01uF	20%	25V	
C1601	1-161-063-00	CERAMIC	0.1uF	10%	50V	
C1602	1-124-472-11	ELECT	470uF	20%	10V	
			(SLV-125/225/225VP)			
C2001	1-126-301-11	ELECT	1uF	20%	50V	
C2002	1-162-293-31	CERAMIC	820PF	10%	50V	
C2004	1-124-229-00	ELECT	33uF	20%	10V	
C2005	1-161-053-00	CERAMIC	0.015uF	10%	50V	
C2009	1-126-154-11	ELECT	47uF	20%	6.3V	
C2010	1-124-234-00	ELECT	22uF	20%	16V	
C2013	1-161-494-00	CERAMIC	0.022uF		25V	
C2016	1-126-301-11	ELECT	1uF	20%	50V	
C2017	1-124-242-00	ELECT	33uF	20%	25V	
C2018	1-126-163-11	ELECT	4.7uF	20%	50V	
C2019	1-124-589-11	ELECT	47uF	20%	16V	
C2020	1-162-286-31	CERAMIC	220PF	10%	50V	
C2021	1-130-309-00	FILM	0.033uF	5%	100V	
C2022	1-161-379-00	CERAMIC	0.01uF	20%	25V	
C2024	1-161-379-00	CERAMIC	0.01uF	20%	25V	
C2025	1-161-494-00	CERAMIC	0.022uF		25V	
C2051	1-161-039-00	CERAMIC	0.001uF	10%	50V	
			(SLV-225VP)			
C2091	1-161-063-00	CERAMIC	0.1uF	10%	50V	
C3001	1-124-257-00	ELECT	2.2uF	20%	50V	
C3002	1-161-379-00	CERAMIC	0.01uF	20%	25V	
C3003	1-161-772-11	CERAMIC	0.1uF	10%	25V	
C3004	1-161-063-00	CERAMIC	0.1uF	10%	50V	
C3005	1-161-063-00	CERAMIC	0.1uF	10%	50V	
C3008	1-126-157-11	ELECT	10uF	20%	16V	
C3009	1-161-379-00	CERAMIC	0.01uF	20%	25V	
C3010	1-162-199-31	CERAMIC	10PF	5%	50V	
C3011	1-162-199-31	CERAMIC	12PF	5%	50V	
C3012	1-161-379-00	CERAMIC	0.01uF	20%	25V	
C3016	1-161-379-00	CERAMIC	0.01uF	20%	25V	
C3017	1-162-288-31	CERAMIC	330PF	10%	50V	
C3018	1-161-039-00	CERAMIC	0.001uF	10%	50V	
			(SLV-225CP)			

Ref.No.	Part No.	Description			Remark
C3020	1-161-379-00	CERAMIC	0.01uF	20%	25V
C3021	1-161-063-00	CERAMIC	0.1uF	10%	50V
C3022	1-126-168-11	ELECT	1000uF	20%	6.3V
C3023	1-161-063-00	CERAMIC	0.1uF	10%	50V
C3501	1-161-379-00	CERAMIC	0.01uF	20%	25V
C3502	1-161-379-00	CERAMIC	0.01uF	20%	25V
C3503	1-161-053-00	CERAMIC	0.015uF	10%	50V
C3505	1-124-234-00	ELECT	22uF	20%	16V
C3506	1-161-329-00	CERAMIC	0.0068uF	30%	25V
C3508	1-124-234-00	ELECT	22uF	20%	16V
C3509	1-126-154-11	ELECT	47uF	20%	6.3V
C3510	1-161-379-00	CERAMIC	0.01uF	20%	25V
C3511	1-162-286-31	CERAMIC	220PF	10%	50V
C3512	1-130-483-00	MYLAR	0.01uF	5%	50V
C3513	1-161-061-11	CERAMIC	0.068uF	10%	50V
C3514	1-136-165-00	FILM	0.1uF	5%	50V
C3515	1-130-481-00	MYLAR	0.0068uF	5%	50V
C3516	1-161-039-00	CERAMIC	0.001uF	10%	50V
C3517	1-161-039-00	CERAMIC	0.001uF	10%	50V
C3518	1-126-154-11	ELECT	47uF	20%	6.3V
C3519	1-161-379-00	CERAMIC	0.01uF	20%	25V
C3520	1-136-167-00	FILM	0.15uF	5%	50V
C3521	1-126-301-11	ELECT	1uF	20%	50V
C3522	1-161-021-11	CERAMIC	0.047uF	10%	25V
C3523	1-126-301-11	ELECT	1uF	20%	50V
C3524	1-161-379-00	CERAMIC	0.01uF	20%	25V
C3525	1-124-268-00	ELECT	0.22uF	20%	50V
C3526	1-161-021-11	CERAMIC	0.047uF	10%	25V
C3527	1-126-157-11	ELECT	10uF	20%	16V
C3528	1-126-157-11	ELECT	10uF	20%	16V
C3529	1-124-234-00	ELECT	22uF	20%	16V
C3530	1-126-154-11	ELECT	47uF	20%	6.3V
C3532	1-130-494-11	MYLAR	0.082uF	5%	50V
C3536	1-126-154-11	ELECT	47uF	20%	6.3V
C3537	1-161-047-00	CERAMIC	0.0047uF	10%	50V
C3540	1-161-327-00	CERAMIC	0.0033uF	30%	50V
C3542	1-126-301-11	ELECT	1uF	20%	50V
C3548	1-126-154-11	ELECT	47uF	20%	6.3V
C3572	1-130-480-00	MYLAR	0.0056uF	5%	50V
C3573	1-130-486-00	MYLAR	0.018uF	10%	50V
C6006	1-124-242-11	ELECT	33uF	20%	25V
C6009	1-126-163-11	ELECT	4.7uF	20%	50V
C6010	1-161-063-00	CERAMIC	0.1uF	10%	50V
C6015	1-161-063-00	CERAMIC	0.1uF	10%	50V
C6017	1-162-290-31	CERAMIC	470PF	10%	50V
C6601	1-126-157-11	ELECT	10uF	20%	16V
C6602	1-126-157-11	ELECT	10uF	20%	16V
C6611	1-124-234-00	ELECT	22uF	20%	16V
C6901	1-161-063-00	CERAMIC	0.1uF	10%	50V
C6902	1-126-157-11	ELECT	10uF	20%	16V

www.freeservicemanuals.info 11/15/15

Digitized by WWW.FREESERVICEMANUALS.INFO

Ref.No.	Part No.	Description	Remark
C6903	1-161-494-00	CERAMIC 0.022uF	25V
C6904	1-124-464-11	ELECT 0.22uF 20%	50V
C6921	1-161-063-00	CERAMIC 0.1uF 10%	50V
		< DIODE >	
D1003	8-719-912-20	DIODE FDH300	
D1006	8-719-912-20	DIODE FDH300	
D1007	8-719-912-20	DIODE FDH300	
D1101	8-719-110-13	DIODE RD9.1ES-B2	
D1201	8-719-912-20	DIODE FDH300	
D1601	8-719-912-20	DIODE FDH300	(SLV-125/225/225VP)
D1602	8-719-912-20	DIODE FDH300	(SLV-125/225/225VP)
D1603	8-719-912-20	DIODE FDH300	
D3001	8-719-986-73	DIODE RB441Q	
D3002	8-719-109-89	DIODE RD5.6ES-B2	
D3003	8-719-110-08	DIODE RD8.2ES-B2	
D3005	8-719-912-20	DIODE FDH300	(SLV-225CP)
D3502	8-719-911-19	DIODE 1SS119	
D3503	8-719-911-19	DIODE 1SS119	
D3504	8-719-911-19	DIODE 1SS119	
D3505	8-719-911-19	DIODE 1SS119	
D3506	8-719-911-19	DIODE 1SS119	
D3507	8-719-986-73	DIODE RB441Q	
D5403	8-719-110-31	DIODE RD12ES-B2	
D5404	8-719-901-83	DIODE 1SS83	
D5405	8-719-110-63	DIODE RD24ES-B3	
D5406	8-719-921-63	DIODE MTZJ-T-77-7.5B	
D6001	8-719-110-78	DIODE RD33ES-B2	
D6002	8-719-911-19	DIODE 1SS119	
D6901	8-719-912-20	DIODE FDH300	
D6902	8-719-912-20	DIODE FDH300	
D6903	8-719-912-20	DIODE FDH300	
		< IC >	
IC101	1-809-674-11	IC LA7395	
IC111	8-759-821-51	IC LC8992	
IC201	1-808-746-11	IC LA7295	
IC301		LC866227A-5241	
IC302	8-759-822-09	IC LB1641	
IC303	1-809-383-11	IC MN1380-L	
IC351	1-809-478-11	IC XRU2797S	
IC602	8-759-043-86	IC ST24C02AB1	
		< COIL >	
L1001	1-410-516-11	INDUCTOR 39uH	
L1002	1-410-316-11	INDUCTOR 1uH	
L1004	1-410-489-11	INDUCTOR 390uH	(SLV-125/225/225VP)
L1004	1-412-818-11	INDUCTOR 0uH	(SLV-225CP)
L1005	1-410-525-11	INDUCTOR 220uH	

Ref.No.	Part No.	Description	Remark
L1006	1-410-525-11	INDUCTOR 220uH	(SLV-125/225/225VP)
L1007	1-410-322-11	INDUCTOR 3.3uH	
L1009	1-412-815-11	INDUCTOR 0uH	
L1012	1-410-513-11	INDUCTOR 22uH	(SLV-225VP)
L1013	1-410-515-11	INDUCTOR 33uH	(SLV-225CP)
L1040	1-410-515-11	INDUCTOR 33uH	(SLV-225VP)
L1081	1-410-521-11	INDUCTOR 100uH	
L1101	1-410-520-11	INDUCTOR 82uH	
L2002	1-412-822-11	HF CHOKE 10000uHJ	
L2003	1-410-491-11	INDUCTOR 560uH	
L3001	1-410-316-11	INDUCTOR 1uH	
L6601	1-408-411-00	INDUCTOR 15uH	
L6603	1-410-509-11	INDUCTOR 10uH	
		< TRANSISTOR >	
Q1002	8-729-119-76	TRANSISTOR 2SA1175-HFE	
Q1003	8-729-119-76	TRANSISTOR 2SA1175-HFE	
Q1004	8-729-119-76	TRANSISTOR 2SA1175-HFE	
Q1006	8-729-119-78	TRANSISTOR 2SC2785-HFE	
Q1007	8-729-119-78	TRANSISTOR 2SC2785-HFE	
Q1009	8-729-119-78	TRANSISTOR 2SC2785-HFE	
Q1010	8-729-993-72	TRANSISTOR 2SA937-Q	(SLV-225VP)
Q1010	1-809-764-11	TRANSISTOR 2SA1561-TL2-R	(SLV-225VP)
Q1011	8-729-900-89	TRANSISTOR DTC144ES	
Q1012	8-729-119-78	TRANSISTOR 2SC2785-HFE	
Q1013	8-729-900-89	TRANSISTOR DTC144ES	
Q1014	8-729-119-78	TRANSISTOR 2SC2785-HFE	
Q1101	8-729-119-78	TRANSISTOR 2SC2785-HFE	
Q1102	8-729-119-78	TRANSISTOR 2SC2785-HFE	
Q1151	8-729-900-36	TRANSISTOR DTC124ES	
Q1152	8-729-119-76	TRANSISTOR 2SA1175-HFE	
Q1201	8-729-900-65	TRANSISTOR DTA144ES	
Q1601	8-729-119-76	TRANSISTOR 2SA1175-HFE	
Q2001	8-729-873-40	TRANSISTOR 2SD734-E	
Q3002	8-729-900-80	TRANSISTOR DTC114ES	
Q3003	8-729-900-65	TRANSISTOR DTA144ES	(SLV-225CP)
Q3004	8-729-900-89	TRANSISTOR DTC144ES	(SLV-225CP)
Q3501	8-729-900-89	TRANSISTOR DTC144ES	
Q3502	8-729-900-89	TRANSISTOR DTC144ES	
Q3504	8-729-900-89	TRANSISTOR DTC144ES	
Q3505	8-729-119-78	TRANSISTOR 2SC2785-HFE	
Q3571	8-729-900-89	TRANSISTOR DTC144ES	
Q3572	8-729-900-36	TRANSISTOR DTC124ES	
Q3573	8-729-900-61	TRANSISTOR DTA114ES	
Q5401	8-729-205-95	TRANSISTOR 2SA1428-Y	
Q5402	8-729-205-97	TRANSISTOR 2SC3668-Y	
Q5403	8-729-111-52	TRANSISTOR 2SB984-K	
Q5404	8-729-111-52	TRANSISTOR 2SB984-K	
Q6002	8-729-119-76	TRANSISTOR 2SA1175-HFE	
Q6611	8-729-119-76	TRANSISTOR 2SA1175-HFE	

Published in Heiloo, Holland.

www.freeservicemanuals.info 11/15/15

Digitized by WWW.FREESERVICEMANUALS.INFO

CP-1 CP-2

Ref.No.	Part No.	Description				Remark
Q6901	8-729-119-78	TRANSISTOR	2SC2785-HFE			
Q6902	8-729-119-76	TRANSISTOR	2SA1175-HFE			
Q6903	8-729-119-78	TRANSISTOR	2SC2785-HFE			
Q6904	8-729-900-89	TRANSISTOR	DTC144ES			
		< RESISTOR >				
R3001	1-212-946-00	FUSIBLE	3.3	5%	1/2W	F
⚠R5404	1-217-638-00	RES, FUSE	1.5	1/4W		
⚠R5408	1-212-873-11	FUSIBLE	47	5%	1/4W	F
		< TRANSFORMER >				
T2001	1-406-366-11	COIL, OSC				
T6901	1-426-511-11	TRANSFORMER, IF				
		< VARIABLE RESISTOR >				
VR101	1-228-995-00	RES, ADJ, METAL 22K				
VR102	1-228-991-00	RES, ADJ, METAL 2.2K				
VR103	1-228-995-00	RES, ADJ, METAL 4.7K				
VR104	1-228-994-00	RES, ADJ, METAL 10K				
VR201	1-228-997-00	RES, ADJ, METAL 100K				
VR351	1-228-998-00	RES, ADJ, METAL 220K				
		< VIBRATOR >				
X1001	1-577-667-11	CRYSTA, OSC 4.43MHz				
X3001	1-579-681-11	RESONATOR, CERAMIC 13.92MHZ				
X3002	1-579-220-11	CRYSTAL, OSC (32KHZ)				
**********						
*	A-6756-510-A	CP-2 BOARD, COMPLETE (SLV-225VP)				
		**********				
*	A-6756-554-A	CP-2 BOARD, COMPLETE (SLV-125/225/225CP)				
		**********				
		< CAPACITOR >				
C1701	1-161-039-00	CERAMIC	0.001uF	10%	50V	
C1702	1-162-207-31	CERAMIC	22PF	5%	50V	
C1711	1-161-039-00	CERAMIC	0.001uF	10%	50V	
C1712	1-162-207-31	CERAMIC	22PF	5%	50V	
C1713	1-161-379-00	CERAMIC	0.01uF	20%	25V	
C1721	1-161-379-00	CERAMIC	0.01uF	20%	25V	(SLV-225VP)
C1722	1-164-073-11	CERAMIC	100PF	10%	50V	(SLV-225VP)
C1723	1-126-157-11	ELECT	10uF	20%	16V	(SLV-225VP)
C1724	1-136-165-00	FILM	0.1uF	5%	50V	(SLV-225VP)
C1725	1-126-157-11	ELECT	10uF	20%	16V	(SLV-225VP)
C1751	1-130-477-00	MYLAR	0.0033uF	5%	50V	
C1752	1-130-477-00	MYLAR	0.0033uF	5%	50V	
C1753	1-161-379-00	CERAMIC	0.01uF	20%	25V	
C1754	1-136-165-00	FILM	0.1uF	5%	50V	
C1755	1-130-470-00	MYLAR	820PF	5%	50V	

Ref.No.	Part No.	Description				Remark
C1756	1-161-379-00	CERAMIC	0.01uF	20%	25V	
C1757	1-126-154-11	ELECT	47uF	20%	6.3V	
C1758	1-161-379-00	CERAMIC	0.01uF	20%	25V	
C1759	1-161-379-00	CERAMIC	0.01uF	20%	25V	
C1760	1-161-379-00	CERAMIC	0.01uF	20%	25V	
C1761	1-164-073-11	CERAMIC	100PF	10%	50V	
C1762	1-161-379-00	CERAMIC	0.01uF	20%	25V	
C1763	1-164-064-11	CERAMIC	56PF	5%	50V	
C1764	1-161-379-00	CERAMIC	0.01uF	20%	25V	
C1765	1-164-064-11	CERAMIC	56PF	5%	50V	
C1766	1-161-379-00	CERAMIC	0.01uF	20%	25V	
C1767	1-161-379-00	CERAMIC	0.01uF	20%	25V	
		< DIODE >				
D1721	8-719-911-19	DIODE	1SS119	(SLV-225VP)		
D1751	8-719-911-19	DIODE	1SS119			
D1752	8-719-911-19	DIODE	1SS119			
		< DELAY LINE >				
DL171	1-415-707-11	DELAY				
DL172	1-415-830-11	DELAY 1H 4.43NTSC				(SLV-125/225/225CP)
DL172	1-415-913-11	DELAY 1H				(SLV-225VP)
		< IC >				
IC171	8-759-996-63	IC	BA7025L	(SLV-225VP)		
IC172	1-809-230-11	IC	M52063SP			
		< COIL >				
L1701	1-410-511-11	INDUCTOR 15uH				
L1702	1-410-515-11	INDUCTOR 33uH				
L1711	1-410-515-11	INDUCTOR 33uH				
		< TRANSISTOR >				
Q1701	8-729-119-78	TRANSISTOR	2SC2785-HFE			
Q1711	8-729-119-78	TRANSISTOR	2SC2785-HFE			
Q1721	8-729-119-78	TRANSISTOR	2SC2785-HFE	(SLV-225VP)		
Q1722	8-729-900-89	TRANSISTOR	DTC144ES	(SLV-225VP)		
Q1723	8-729-900-65	TRANSISTOR	DTA144ES	(SLV-225VP)		
Q1751	8-729-119-78	TRANSISTOR	2SC2785-HFE			
		< RESISTOR >				
R1753	1-214-761-00	METAL	22K	1%	1/4W	
		< VIBRATOR >				
XF171	1-236-633-11	FILTER				(SLV-225VP)
XF172	1-433-396-11	TRANSFORMER, OSCILLATION				(SLV-225VP)
**********						

Published in Heiloo, Holland.

www.freeservicemanuals.info 11/15/15

Digitized by WWW.FREESERVICEMANUALS.INFO

Ref.No.	Part No.	Description			Remark
	A-6756-237-A	MC-1 BOARD, COMPLETE			
		**********			
	1-571-932-11	SWITCH, LEAF			
	1-808-723-11	PHOTO COUPLER SPI-315-04-C			
**********					
*	A-6756-374-A	MC-4 BOARD, COMPLETE			
		**********			
	1-808-722-11	DIODE LN59			
**********					
*	A-6756-515-A	PW-1 BOARD, COMPLETE (SLV-225VP)			
		**********			
*	A-6756-585-A	PW-1 BOARD, COMPLETE (SLV-125/225/225CP)			
		**********			
	1-533-258-11	HOLDER, FUSE			
	1-533-259-11	HOLDER, FUSE			
	3-740-374-01	COVER			
		< CAPACITOR >			
⚠C5001	1-137-151-11	CAP, PE	4700PF	250V	
C5101	1-124-563-11	ELECT	2200uF	20% 25V	
C5102	1-124-563-11	ELECT	2200uF	20% 25V	
C5103	1-124-523-11	ELECT	4700uF	20% 16V	
C5104	1-126-338-11	ELECT	47uF	20% 63V	
C5105	1-124-131-00	ELECT	47uF	20% 100V	
C5106	1-136-165-00	FILM	0.1uF	5% 50V	
C5107	1-124-918-11	ELECT	47uF	20% 63V	
		< DIODE >			
D5101	8-719-200-02	DIODE	10E2		
D5102	8-719-200-02	DIODE	10E2		
D5103	1-809-765-11	DIODE	ERC04-02FL38		
D5104	1-809-765-11	DIODE	ERC04-02FL38		
D5105	8-719-300-45	DIODE	EM-1Z		
D5106	8-719-300-45	DIODE	EM-1Z		
D5107	8-719-300-45	DIODE	EM-1Z		
D5108	8-719-300-45	DIODE	EM-1Z		
D5109	8-719-901-83	DIODE	1SS83		
D5110	8-719-901-83	DIODE	1SS83		
D5111	8-719-901-83	DIODE	1SS83		
D5112	8-719-901-83	DIODE	1SS83		
		< FUSE >			
⚠F5001	1-532-235-00	FUSE, TIME-LAG	T315mA	250V	
⚠F5101	1-532-215-00	FUSE, TIME-LAG	T800mA	250V	
⚠F5102	1-532-259-00	FUSE, TIME-LAG	T1.6A	250V	
⚠F5103	1-532-203-00	FUSE, TIME-LAG	T2A	250V	

Ref.No.	Part No.	Description			Remark
		< COIL >			
⚠L5001	1-414-089-11	LF CHOKE	1MH 1A	250V (SLV-225VP)	
		< RESISTOR >			
R5101	1-247-754-11	CARBON	1.5K	1/2W	
R5102	1-247-754-11	CARBON	1.5K	1/2W	
		< TRANSFORMER >			
⚠T5071	1-450-989-11	TRANSFORMER, POWER			
**********					
*	A-6756-516-A	PW-2 BOARD, COMPLETE			
		**********			
		< IC >			
IC521	1-809-031-11	IC	STK5446		
**********					
*	A-6756-517-A	PW-3 BOARD, COMPLETE			
		**********			
		< CONNECTOR >			
CN531	1-573-623-11	CONNECTOR, INLET			
**********					
*	A-6756-508-A	TB-1 BOARD, COMPLETE (SLV-225/225VP)			
		**********			
*	A-6756-607-A	TB-1 BOARD, COMPLETE (SLV-225CP)			
		**********			
*	A-6756-652-A	TB-1 BOARD, COMPLETE (SLV-125)			
		**********			
		< CAPACITOR >			
C8551	1-161-329-00	CERAMIC	0.0068uF	30% 25V	
C8552	1-161-039-00	CERAMIC	0.001uF	10% 50V	
C8553	1-161-329-00	CERAMIC	0.0068uF	30% 25V (SLV-225CP)	
C8554	1-161-039-00	CERAMIC	0.001uF	10% 50V (SLV-225CP)	
C8601	1-126-529-11	ELECT	0.47uF	20% 50V (SLV-125/225/225VP)	
		< CAPACITOR >			
C8602	1-126-157-11	ELECT	10uF	20% 16V (SLV-125/225/225VP)	
C8604	1-161-063-00	CERAMIC	0.1uF	10% 50V (SLV-125/225/225VP)	
C8605	1-162-282-31	CERAMIC	100PF	10% 50V (SLV-125/225/225VP)	

Note: The components identified by mark ⚠ or dotted line with mark ⚠ are critical for safety.
Replace only with part number specified.

Published in Heiloo, Holland.

www.freeservicemanuals.info 11/15/15

Digitized by WWW.FREESERVICEMANUALS.INFO

TB-1 TB-2 TM-1

Ref.No.	Part No.	Description	Remark
		< CONNECTOR >	
CN871	1-573-617-11	SOCKET 21P	(SLV-225/225VP)
		< DIODE >	
D8502	8-719-912-20	DIODE FDH300	(SLV-125/225/225VP)
D8601	8-719-109-89	DIODE RD5.6ES-B2	
D8602	8-719-109-89	DIODE RD5.6ES-B2	(SLV-225CP)
D8603	8-719-110-41	DIODE RD15ES-B2	(SLV-225CP)
D8651	8-719-912-20	DIODE FDH300	(SLV-125/225/225VP)
D8652	8-719-912-20	DIODE FDH300	(SLV-125/225/225VP)
		< IC >	
IC861	8-759-820-48	IC LA7221	(SLV-125/225/225VP)
		< TRANSISTOR >	
Q8501	8-729-907-34	TRANSISTOR 2SD1468S-S	(SLV-125/225/225VP)
Q8502	8-729-907-34	TRANSISTOR 2SD1468S-S	(SLV-125/225/225VP)
Q8503	8-729-900-65	TRANSISTOR DTA144ES	(SLV-125/225/225VP)
Q8511	8-729-900-89	TRANSISTOR DTC144ES	(SLV-125/225/225VP)
Q8601	8-729-900-89	TRANSISTOR DTC144ES	(SLV-125/225/225VP)
Q8602	8-729-900-89	TRANSISTOR DTC144ES	(SLV-125/225/225VP)
Q8651	8-729-119-76	TRANSISTOR 2SA1175-HFE	(SLV-125/225/225VP)
Q8652	8-729-900-89	TRANSISTOR DTC144ES	(SLV-125/225/225VP)
**********			
*	A-6756-617-A	TB-2 BOARD, COMPLETE	(SLV-225CP ONLY)
		**********	
		< CAPACITOR >	
C8821	1-124-589-11	ELECT 47uF 20% 16V	
C8829	1-124-831-11	ELECT 4.7uF 20% 25V	
C8901	1-126-529-11	ELECT 0.47uF 20% 50V	
C8902	1-161-379-00	CERAMIC 0.01uF 20% 25V	
C8903	1-126-154-11	ELECT 47uF 20% 6.3V	
C8904	1-126-529-11	ELECT 0.47uF 20% 50V	
C8906	1-126-301-11	ELECT 1uF 20% 50V	
C8907	1-126-301-11	ELECT 1uF 20% 50V	
C8908	1-124-472-11	ELECT 470uF 20% 10V	
C8909	1-124-589-11	ELECT 47uF 20% 16V	
C8910	1-161-379-00	CERAMIC 0.01uF 20% 25V	

Ref.No.	Part No.	Description	Remark
		< DIODE >	
D8901	8-719-109-89	DIODE RD5.6ES-B2	
D8902	8-719-109-89	DIODE RD5.6ES-B2	
D8903	8-719-912-20	DIODE FDH300	
D8904	8-719-912-20	DIODE FDH300	
D8905	8-719-912-20	DIODE FDH300	
D8906	8-719-912-20	DIODE FDH300	
D8907	8-719-912-20	DIODE FDH300	
D8908	8-719-912-20	DIODE FDH300	
D8909	8-719-912-20	DIODE FDH300	
		< IC >	
IC881	8-759-300-71	IC HD14053BFP	
IC882	8-759-300-71	IC HD14053BFP	
IC891	8-759-504-94	IC BA7630S	
		< TRANSISTOR >	
Q8901	8-729-119-76	TRANSISTOR 2SA1175-HFE	
Q8902	8-729-119-76	TRANSISTOR 2SA1175-HFE	
Q8903	8-729-900-89	TRANSISTOR DTC144ES	
Q8904	8-729-119-76	TRANSISTOR 2SA1175-HFE	
Q8906	8-729-900-89	TRANSISTOR DTC144ES	
Q8907	8-729-900-89	TRANSISTOR DTC144ES	
Q8908	8-729-119-76	TRANSISTOR 2SA1175-HFE	
**********			
*	A-6756-518-A	TM-1 BOARD, COMPLETE	(SLV-225VP)
		**********	
*	A-6756-618-A	TM-1 BOARD, COMPLETE	(SLV-225CP)
		**********	
*	A-6756-634-A	TM-1 BOARD, COMPLETE	(SLV-225)
		**********	
*	A-6756-653-A	TM-1 BOARD, COMPLETE	(SLV-125)
		**********	
*	3-947-398-01	HOLDER	
*	3-947-424-01	HOLDER, LED	
*	3-947-425-01	HOLDER, LED	
		< FLUORESCENT INDICATOR >	
A7001	1-519-697-11	INDICATOR TUBE FLUORESCENT	(SLV-225/225CP/225VP)
		< CAPACITOR >	
C7001	1-136-956-11	DL-ELECT 0.047FZ	
C7002	1-126-163-11	ELECT 4.7uF 20% 50V	
C7003	1-126-163-11	ELECT 4.7uF 20% 50V	
C7071	1-161-379-00	CERAMIC 0.01uF 20% 25V	(SLV-225/225CP/225VP)
C7072	1-124-257-00	ELECT 2.2uF 20% 50V	(SLV-225/225CP/225VP)

Published in Heitod, Holland.

www.freeservicemanuals.info 11/15/15

Digitized by WWW.FREESERVICEMANUALS.INFO

Ref.No.	Part No.	Description	Remark
		< DIODE >	
D7006	8-719-912-20	DIODE FDH300 (SLV-225VP)	
D7008	8-719-912-20	DIODE FDH300	
D7009	8-719-912-20	DIODE FDH300	
D7011	8-719-912-20	DIODE FDH300	
D7012	8-719-912-20	DIODE FDH300	
D7013	8-719-912-20	DIODE FDH300	
D7014	8-719-912-20	DIODE FDH300 (SLV-225VP)	
D7015	8-719-912-20	DIODE FDH300	
D7021	8-719-912-20	DIODE FDH300	
D7025	8-719-912-20	DIODE FDH300	
D7036	8-719-912-20	DIODE FDH300 (SLV-225CP)	
D7038	8-719-912-20	DIODE FDH300 (SLV-225CP)	
D7041	8-719-912-20	DIODE FDH300 (SLV-225/225CP/225VP)	
D7042	8-719-912-20	DIODE FDH300 (SLV-225/225CP/225VP)	
D7043	8-719-912-20	DIODE FDH300 (SLV-225/225CP/225VP)	
D7044	8-719-912-20	DIODE FDH300 (SLV-225/225CP/225VP)	
D7051	8-719-301-44	LED SEL2410E-D (AUTO)	
D7052	8-719-301-44	LED SEL2410E-D (AUTO)	
D7053	8-719-912-20	DIODE FDH300	
D7061	8-719-301-44	LED SEL2410E-D (NAP)	
D7071	8-719-109-93	DIODE RD6.2ES-B2 (SLV-225/225CP)	
D7071	8-719-912-20	DIODE FDH300 (SLV-225VP)	
D7072	8-719-912-20	DIODE FDH300 (SLV-225/225CP/225VP)	
D7073	8-719-912-20	DIODE FDH300 (SLV-225/225CP/225VP)	
		< COIL >	
L7001	1-410-515-11	INDUCTOR 33uH	
		< TRANSISTOR >	
Q7051	8-729-900-89	TRANSISTOR DTC144ES	
Q7071	8-729-900-89	TRANSISTOR DTC144ES (SLV-225/225CP/225VP)	
Q7072	8-729-900-65	TRANSISTOR DTA144ES (SLV-225/225CP/225VP)	
		< IR RECEIVER BACK UNIT >	
RR701	1-466-717-11	BACK UNIT, IR RECEIVER	
		< SWITCH >	
S7001	1-692-216-11	SWITCH, PUSH (REW) (SLV-125)	
S7002	1-692-216-11	SWITCH, PUSH (FF) (SLV-125)	
S7005	1-692-104-11	SWITCH, PUSH (PROGRAM +)	
S7007	1-692-104-11	SWITCH, PUSH (CL)	
S7011	1-692-216-11	SWITCH, PUSH (PLAY) (SLV-125)	
S7012	1-692-216-11	SWITCH, PUSH (STOP) (SLV-125)	
S7015	1-692-104-11	SWITCH, PUSH (PROGRAM -)	
S7021	1-692-104-11	SWITCH, PUSH (REC) (SLV-225/225CP/225VP)	
S7022	1-692-216-11	SWITCH, PUSH (PAUSE) (SLV-125)	
S7024	1-692-104-11	SWITCH, PUSH (PRESET)	
S7025	1-692-104-11	SWITCH, PUSH (NEXT)	
S7029	1-692-104-11	SWITCH, PUSH (PAUSE) (SLV-225/225CP/225VP)	
S7051	1-572-662-11	SWITCH, ROTARY (PLAY/STOP/REW/FF) (SLV-225/225CP/225VP)	
**********			
*	A-6756-519-A	TM-2 BOARD, COMPLETE	
		**********	
	3-943-546-01	HOLDER, LED	
		< DIODE >	
D7101	1-809-516-11	LED MPG3868S-J85K-E (ON/STANDBY)	
D7102	1-809-516-11	LED MPG3868S-J85K-E (ON/STANDBY)	
		< SWITCH >	
S7101	1-692-104-11	SWITCH, PUSH (TRACKING +)	
S7102	1-692-104-11	SWITCH, PUSH (AUTO)	
S7103	1-692-104-11	SWITCH, PUSH (TRACKING -)	
S7104	1-692-104-11	SWITCH, PUSH (EJECT)	
S7105	1-692-104-11	SWITCH, PUSH (POWER)	
S7152	1-692-107-11	SWITCH, SLIDE 2-2 (COLOR SYSTEM)	
		< VARIABLE RESISTOR >	
VR711	1-241-889-11	VR. ROTARY 3KB (PICTURE)	
**********			
*	A-6756-509-A	TM-8 BOARD, COMPLETE (SLV-225VP ONLY)	
		**********	
		< CAPACITOR >	
C7802	1-162-284-31	CERAMIC 150PF 10% 50V	
C7803	1-136-502-11	MYLAR 0.33uF 5% 50V	
C7804	1-130-495-00	MYLAR 0.1uF 5% 50V	
		< IC >	
IC781	8-759-030-60	IC SDA5642	
		< RESISTOR >	
R7805	1-216-057-00	METAL CHIP 2.2K 5% 1/10W	
R7806	1-216-121-00	METAL CHIP 1M 5% 1/10W	
R7807	1-216-119-00	METAL CHIP 820K 5% 1/10W	
R7808	1-216-097-00	METAL CHIP 100K 5% 1/10W	
R7809	1-216-073-00	METAL CHIP 10K 5% 1/10W	
R7810	1-216-123-11	METAL CHIP 1.2M 5% 1/10W	
R7811	1-216-025-00	METAL CHIP 100 5% 1/10W	
R7812	1-216-067-00	METAL CHIP 5.6K 5% 1/10W	
**********			

Published in Heiloo, Holland.

www.freeservicemanuals.info 11/15/15

Digitized by WWW.FREESERVICEMANUALS.INFO

VP-1

Ref.No.	Part No.	Description			Remark
*	A-6756-513-A	VP-1 BOARD, COMPLETE			
		**********			
		< CAPACITOR >			
C1801	1-127-487-00	ELECT(SOLID)	4.7uF	20%	10V
C1804	1-161-379-00	CERAMIC	0.01uF	20%	25V
C1805	1-124-252-00	ELECT	0.33uF	20%	50V
C1807	1-162-290-31	CERAMIC	470PF	10%	50V
C1808	1-164-073-11	CERAMIC	100PF	10%	50V
C1809	1-161-379-00	CERAMIC	0.01uF	20%	25V
C1810	1-161-379-00	CERAMIC	0.01uF	20%	25V
C1811	1-161-379-00	CERAMIC	0.01uF	20%	25V
C1812	1-161-379-00	CERAMIC	0.01uF	20%	25V
C1813	1-161-057-00	CERAMIC	0.033uF	10%	50V
C1814	1-161-057-00	CERAMIC	0.033uF	10%	50V
C1851	1-161-379-00	CERAMIC	0.01uF	20%	25V
C1852	1-162-211-31	CERAMIC	33PF	5%	50V
C1853	1-162-211-31	CERAMIC	33PF	5%	50V
C1854	1-101-880-00	CERAMIC	47PF	5%	50V
C1855	1-164-064-11	CERAMIC	56PF	5%	50V
C1861	1-161-379-00	CERAMIC	0.01uF	20%	25V
C1862	1-126-154-11	ELECT	47uF	20%	6.3V
		< IC >			
IC181	1-809-705-11	IC LA7377			
		< COIL >			
L1801	1-410-520-11	INDUCTOR 82uH			
L1802	1-410-519-11	INDUCTOR 68uH			
L1851	1-412-454-11	HF CHOKE 5.6uH			
L1852	1-410-518-41	INDUCTOR 56uH			
L1853	1-410-511-11	INDUCTOR 15uH			
L1854	1-410-511-11	INDUCTOR 15uH			
		< TRANSISTOR >			
Q1801	8-729-266-83	TRANSISTOR 2SC2668			
Q1851	8-729-266-83	TRANSISTOR 2SC2668			
Q1852	8-729-266-83	TRANSISTOR 2SC2668			
		< VARIABLE RESISTOR >			
VR182	1-228-991-00	RES, ADJ, METAL 2.2K			
**********					
		MISCELLANEOUS			
		**********			
25	1-466-258-11	MODULATOR, RF			
27	1-693-165-11	TUNER PACK			
28	1-466-741-11	IF PACK			
105	1-808-710-11	PHOTO TRANSISTOR			

Ref.No.	Part No.	Description	Remark
270	1-572-383-11	SWITCH, ROTARY	
* 289	1-461-017-11	ROTOR	
299	1-462-284-11	STATOR	
**********			
		ACCESSORIES & PACKING MATERIALS	
		**********	
	1-465-564-61	REMOTE COMMANDER (RMT-V262G)	(SLV-125)
	1-465-739-31	REMOTE COMMANDER (RMT-V126)	(SLV-225)
	1-465-739-41	REMOTE COMMANDER (RMT-V126A)	(SLV-225VP)
	1-465-739-51	REMOTE COMMANDER (RMT-V126D)	(SLV-225CP)
⚠	1-590-224-11	CORD, POWER	
	1-696-390-11	CABLE, ANT	(SLV-225VP)
	3-749-104-01	CABLE, ANT	(SLV-125/225/225CP)
	2-181-766-01	COVER, BATTERY	(SLV-225/225CP/225VP)
	4-394-031-01	COVER, BATTERY	(SLV-125)
	3-755-341-11	MANUAL, INSTRUCTION (ITALIAN, FRENCH)	(SLV-225/225VP)
	3-755-354-11	MANUAL, INSTRUCTION (SPANISH)	(SLV-225CP)
	3-755-355-11	MANUAL, INSTRUCTION (ITALIAN, FRENCH, DUTCH)	(SLV-125)
	3-755-453-11	MANUAL, INSTRUCTION (GERMAN)	(SLV-225/225VP)
	3-948-673-01	DRIVER, PLASTIC	(SLV-125)
	3-949-043-01	DOOR, REMOTE CONTROL	(SLV-225)
	3-949-044-01	DOOR, REMOTE CONTROL	(SLV-225VP)
	3-949-045-01	DOOR, REMOTE CONTROL	(SLV-225CP)
*	3-948-620-01	CUSHION (FRONT), INNER	
*	3-948-621-01	CUSHION (BACK), INNER	
*	3-949-158-01	INDIVIDUAL CARTON	(SLV-225/225CP/225VP)
*	3-949-293-01	INDIVIDUAL CARTON	(SLV-125)
**********			

Note: The components identified by mark ⚠ or dotted line with mark ⚠ are critical for safety.
Replace only with part number specified.

Published in Heiloo, Holland.

www.freeservicemanuals.info 11/15/15

Digitized by WWW.FREESERVICEMANUALS.INFO

Ref.No.	Part No.	Description	Remark

****
HARDWARE LIST
****

#1	7-685-647-79	SCREW +BTP 3X10 TYPE2 N-S	
#2	7-682-547-09	SCREW +B 3X6	
#3	7-685-534-19	SCREW +BTP 2.6X8 TYPE2 N-S	
#4	7-685-661-19	SCREW +BVTP 4X12 TYPE2 N-S	
#5	7-685-131-19	SCREW +BTP 2.6X4 TYPE2 N-S	
#6	7-624-105-04	STOP RING 2.3, TYPE -E	
#7	7-682-648-09	SCREW (3X8), +PW	
#8	7-621-732-08	SET-SCT, HEX. 2X3 FLAT POINT	
#9	7-621-775-20	SCREW +B 2.6X5	
#10	7-685-133-19	SCREW, TOTSU PTP 2.6X6 TYPE2	
#11	7-682-903-01	SCREW (3X4), +PWH	
#12	7-621-759-45	+PSW, 2.6X6	
#13	7-688-001-01	W 2, SMALL	
#14	7-685-134-19	SCREW, TOTSU PTP 2.6X8 TYPE2	
#15	7-685-650-79	SCREW +BTP 3X16 TYPE2 N-S	
#16	7-685-646-79	SCREW +BVTP 3X8 TYPE2 SLIT	

Published in Heiloo, Holland.

www.freeservicemanuals.info

SLV-125/225/225CP/225VP

RMT-V126/V126A/V126D/V262G

Digitized by WWW.FREESERVICEMANUALS.INFO

Description

CARBON RESISTOR 5% ¼W 5% ¼W A

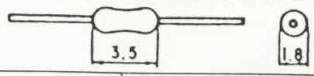

Value	Part. No.	Value	Part. No.	Value	Part. No.	Value	Part. No.	Value	Part. No.	Value	Part. No.
0.22Ω		11Ω	1-247-784-00	200Ω	1-247-814-11	3.6kΩ	1-247-844-11	62kΩ	1-247-874-11	1.2MΩ	
0.27Ω		12Ω	1-249-394-11	220Ω	1-249-409-11	3.9kΩ	1-249-424-11	68kΩ	1-249-439-11	1.5MΩ	
0.33Ω		13Ω	1-247-786-11	240Ω	1-247-816-11	4.3kΩ	1-247-846-11	75kΩ	1-247-876-11	1.8MΩ	
0.39Ω		15Ω	1-249-395-11	270Ω	1-249-410-11	4.7kΩ	1-249-425-11	82kΩ	1-249-440-11	2.0MΩ	
0.47Ω	1-249-377-11	16Ω	1-247-788-00	300Ω	1-247-818-11	5.1kΩ	1-247-848-11	91kΩ	1-247-878-00	2.2MΩ	1-259-880-11
0.56Ω	1-249-378-11	18Ω	1-249-396-11	330Ω	1-249-411-11	5.6kΩ	1-249-426-11	100kΩ	1-249-441-11	2.7MΩ	
0.68Ω	1-249-379-11	20Ω	1-247-790-11	360Ω	1-247-820-11	6.2kΩ	1-247-850-11	110kΩ	1-247-880-11	3.3MΩ	
0.82Ω	1-249-380-11	22Ω	1-249-397-11	390Ω	1-249-412-11	6.8kΩ	1-249-427-11	120kΩ	1-247-881-00	3.9MΩ	
1.0Ω	1-249-381-11	24Ω	1-247-792-11	430Ω	1-247-822-11	7.5kΩ	1-247-852-11	130kΩ	1-247-882-11	4.7MΩ	
1.2Ω	1-249-382-11	27Ω	1-249-398-11	470Ω	1-249-413-11	8.2kΩ	1-249-428-11	150kΩ	1-247-883-00	5.6MΩ	
1.5Ω	1-249-383-11	30Ω	1-247-794-11	510Ω	1-249-442-11	9.1kΩ	1-247-854-11	160Ω	1-247-884-11	6.8MΩ	
1.6Ω		33Ω	1-249-399-11	560Ω	1-249-414-11	10kΩ	1-249-429-11	180Ω	1-247-885-00	8.2MΩ	
1.8Ω	1-249-384-11	36Ω	1-247-796-11	620Ω	1-247-826-00	11kΩ	1-247-856-00	200kΩ	1-247-886-11	10MΩ	
2.2Ω	1-249-385-11	39Ω	1-249-400-11	680Ω	1-249-415-11	12kΩ	1-249-430-11	220kΩ	1-247-887-00	12MΩ	
2.4Ω	1-247-768-00	43Ω	1-247-798-11	750Ω	1-247-828-11	13kΩ	1-247-858-11	240kΩ	1-247-888-11	15MΩ	
2.7Ω	1-249-386-11	47Ω	1-249-401-11	820Ω	1-249-416-11	15kΩ	1-249-431-11	270kΩ	1-247-889-00	18MΩ	
3.0Ω	1-247-770-00	51Ω	1-247-800-11	910Ω	1-247-830-11	16kΩ	1-247-860-11	300kΩ	1-247-890-11	22MΩ	
3.3Ω	1-249-387-11	56Ω	1-249-402-11	1.0kΩ	1-249-417-11	18kΩ	1-249-432-11	330kΩ	1-247-891-00		
3.6Ω	1-247-772-00	62Ω	1-247-802-11	1.1kΩ	1-247-832-11	20kΩ	1-247-862-11	360kΩ	1-247-892-11		
3.9Ω	1-249-388-11	68Ω	1-249-403-11	1.2kΩ	1-249-418-11	22kΩ	1-249-433-11	390kΩ	1-247-893-11		
4.3Ω	1-247-774-00	75Ω	1-247-804-11	1.3kΩ	1-247-834-11	24kΩ	1-247-864-11	430kΩ	1-247-894-11		
4.7Ω	1-249-389-11	82Ω	1-249-404-00	1.5kΩ	1-249-419-11	27kΩ	1-249-434-11	470kΩ	1-247-895-00		
5.1Ω	1-247-776-00	91Ω	1-247-806-11	1.6kΩ	1-247-836-11	30kΩ	1-247-866-11	510kΩ	1-247-896-11		
5.6Ω	1-249-390-11	100Ω	1-249-405-11	1.8kΩ	1-249-420-11	33kΩ	1-249-435-11	560kΩ	1-247-897-11		
6.2Ω	1-247-778-00	110Ω	1-247-808-11	2.0kΩ	1-247-838-00	36kΩ	1-247-868-11	620kΩ	1-247-898-11		
6.8Ω	1-249-391-11	120Ω	1-249-406-11	2.2kΩ	1-249-421-11	39kΩ	1-249-436-11	680kΩ	1-247-899-11		
7.5Ω	1-247-780-00	130Ω	1-247-810-11	2.4kΩ	1-247-840-00	43kΩ	1-247-870-11	750kΩ	1-247-900-11		
8.2Ω	1-249-392-11	150Ω	1-249-407-11	2.7kΩ	1-249-422-11	47kΩ	1-249-437-11	820kΩ	1-247-901-11		
9.1Ω	1-247-782-00	160Ω	1-247-812-11	3.0kΩ	1-247-842-11	51kΩ	1-247-872-11	910kΩ	1-247-902-11		
10Ω	1-249-393-11	180Ω	1-249-408-11	3.3kΩ	1-249-423-11	56kΩ	1-249-438-11	1.0MΩ	1-247-903-00		

Free service manuals
Gratis schema's
Digitized by
www.freeservicemanuals.info

9-973-263-11

Sony Corporation
Home Video Group

English
92H0658-1
Printed in Japan

©1992.8

Published in Heiloo, Holland. Published by Customer Relations and Service Group